MATHEMATICS OF COMPUTATION
Volume 83, Number 286, March 2014, Pages 809–833
S 0025-5718(2013)02734-2
Article electronically published on July 10, 2013

TWO-STAGE APPROXIMATION METHODS WITH EXTENDED B-SPLINES

O. DAVYDOV, J. PRASISWA, AND U. REIF

ABSTRACT. We develop and analyze a framework for two-stage methods with EB-splines, applicable to continuous and discrete approximation problems. In particular, we propose a weighted discrete least squares fit that yields optimal convergence rates for sufficiently dense data on Lipschitz domains in $\mathbb{R}^d$.

1. INTRODUCTION

The basic idea of a two-stage approximation method, introduced by Schumaker in [23], consists in using local approximations in the first stage as input for a piecewise polynomial quasi-interpolation operator in the second stage. This combines high flexibility in fitting local features of the data with convenient representation of the approximation suitable for efficient processing such as fast evaluation and surface visualization; see [5, 6, 7, 12]. Moreover, the two-stage methods are naturally parallelizable and, in contrast to the approaches based on a directly computed global approximation [8], do not require solving any large linear systems.

One of the most prominent types of piecewise polynomials used in geometric modeling are tensor product B-splines. They are often preferred thanks to their simple uniform structure and efficient implementation. Discrete least squares approximation with B-splines is the method of choice in many applications, like reverse engineering or car body design. However, when approximating functions or data defined on a non-rectangular domain Ω, the trimming required at the boundary leads to severe problems because the basis functions typically lose their stability when restricted to Ω. Figure 1 illustrates a typical problem arising in scattered data fitting, where a function is approximated from its values at a finite set of data sites. Here, the domain Ω is the disk with radius $r = 2.5$ centered at the origin. The function $f : \Omega \ni (x, y) \mapsto \sin(x) + y^2$ is to be approximated using its values on a finite set of evenly distributed data sites in the discrete least squares sense by biquadratic tensor product B-splines with integer knots. Since f is defined only on Ω, it makes sense to restrict also the approximant to that set. Hence, only the 56 B-splines whose support intersects Ω are relevant for solving the problem, and all others are disregarded. The condition number of the normal equation for determining the spline coefficients is about $2.5 \cdot 10^{13}$, indicating a loss of stability of the standard B-spline basis. However, diagonal preconditioning reduces the condition number to a modest value of less than 1000 so that the system can be solved accurately. This observation is in line with the results in [21] concerning

Received by the editor December 17, 2010 and, in revised form, June 1, 2012.
2010 *Mathematics Subject Classification.* Primary 41A15; Secondary 65D07.
The first author was supported in part by a Research Fellowship from the Alexander von Humboldt Foundation.

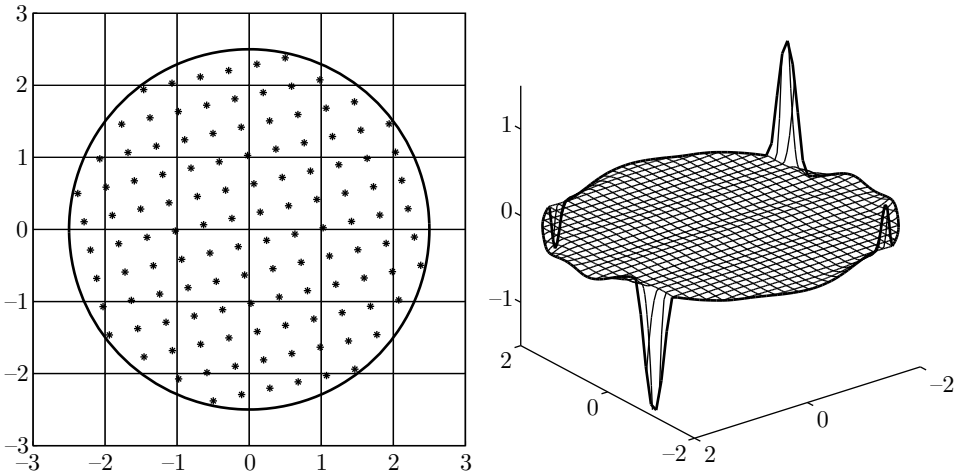

(a) Domain and data points (b) Approximation with standard B-splines

FIGURE 1. Large error near boundary

stabilization of B-splines by normalization. The maximal error at the data sites is less than 0.01. By contrast, the maximal deviation between the given function and the approximating spline on all of the disk is more than 100 times larger, where the peaks are located near the boundary; see Figure 1(b). This problem, shown here in a particularly drastic case, is persistent, even when using very dense data sets.

To overcome these difficulties, we suggest the use of *extended B-splines (EB-splines)*, as introduced in [15, 13]. The basic idea is that B-splines supported near the boundary of the domain are coupled with inner ones. This process yields a stable basis, which is important from a practical point of view. However, boundary artifacts, as shown above, are related to the approximation space itself, and occur independent of the chosen basis. It was observed in [14], and will be proven here, that approximation in EB-spline spaces avoids undesirable behavior near the boundary and provides optimal convergence on the entire domain.

Even when using well suited bases there is another subtle problem with ordinary discrete least squares fits. It arises when using unevenly distributed data sites; see [19] for a similar discussion in the context of moving least squares methods. We illustrate this problem by a slightly artificial example, presented in Figure 2. Here, the function $f(x, y) = 1 - x^2 - y^2$ is approximated on $[-0.5, 0.5]^2$ by bilinear polynomials. We assume that a large number of data points lies on a segment of the circle obtained by projecting the intersection curve of the graphs of $s(x, y) = kx + 0.75$ and f into the xy-plane. As illustrated in Figure 2(b), this uneven distribution of data sites forces the discrete least squares fit to deviate from f by more than $k/24$; see the calculations in Example 5.3. Since k may be chosen arbitrarily large, the discrete least squares fit cannot guarantee reasonably small approximation error. By contrast, an optimal fit on the same data with respect to the discrete max-norm would yield a maximal error of order h^2.

The purpose of this paper is to develop and analyze a framework for two-stage methods with EB-splines, free of the problems discussed above. In particular, we

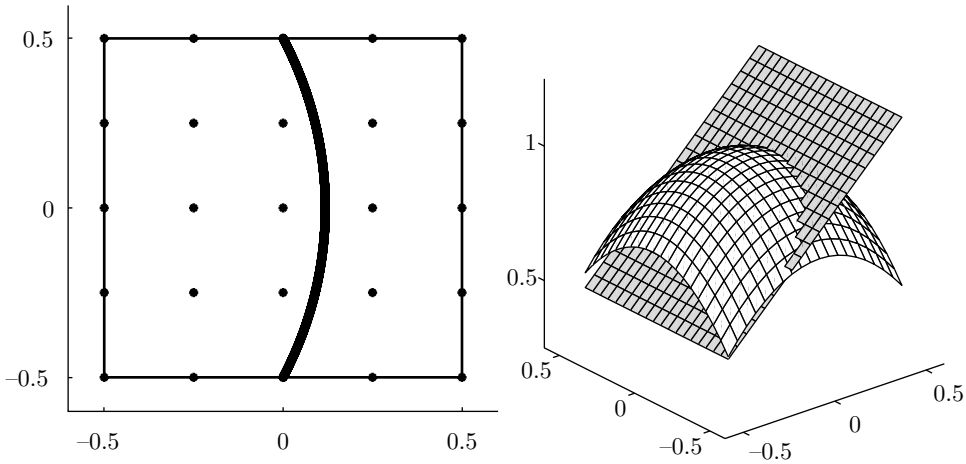

(a) Data points (b) Resulting approximation

FIGURE 2. Uneven data distribution

propose a local weighted least squares fit which yields optimal convergence rates for sufficiently dense data on Lipschitz domains in $\mathbb{R}^d$.

Since the local approximations in the first stage have to be performed on subdomains of Ω which may inherit a complicated boundary from Ω, and by considerations of efficiency, we propose to use EB-splines also as the local approximation tool. Therefore we need error bounds which do not include constants depending on the subdomains in an undisclosed way. Unfortunately, the Bramble-Hilbert Lemma in its known variants can only be used on relatively simple domains (e.g. star-shaped or convex), and the standard approach of applying an extension theorem for Sobolev spaces is ruled out because it makes the constants in the local error bounds dependent on the subdomains. Instead, we develop a new approach based on extending any subset of Ω to a graph-bounded set.

The paper is organized as follows. In Section 2 we establish a Bramble-Hilbert-type lemma for sufficiently small subsets of Ω in the particular form required later on. Section 3 is devoted to EB-splines and some of their basic properties. Then, in Section 4, two-stage methods for EB-splines are defined and analyzed. These results, which are fairly general, are specialized to local least squares techniques in Section 5. While the continuous case is easily settled, discrete problems require more care. We consider both standard least squares techniques and a weighted fit that yields qualitatively optimal approximation results. Finally, in Section 6, we confirm our theoretical results by numerical experiments.

2. Local polynomial approximation

In this paper, we consider the approximation of functions on a bounded connected *Lipschitz domain* $\Omega \subset \mathbb{R}^d$, characterized as follows: For some numbers $\delta, \mu > 0$ and each ℓ in some finite index set $\Lambda \subset \mathbb{N}$, there is an open cube $Y_\ell := (0, \eta_\ell)^{d-1}$, a function $\zeta_\ell : Y_\ell \to [\delta, \infty)$ with Lipschitz constant

$$\sup_{y,y' \in Y_\ell} \frac{|\zeta_\ell(y) - \zeta_\ell(y')|}{\|y - y'\|_\infty} \le \mu,$$

and an isometric map $I_\ell : \mathbb{R}^d \to \mathbb{R}^d$ such that

$$\Omega = \bigcup_{\ell\in\Lambda} I_\ell(\Omega_\ell), \quad \Omega_\ell := \{(y,z) \in Y_\ell \times \mathbb{R} : 0 < z < \zeta_\ell(y)\}.$$

Further, the sets $I_\ell(\Omega_\ell)$ overlap such that the subsets $\Omega'_\ell := \{(y,z) \in \Omega_\ell : \delta < y < \eta_\ell - \delta,\ z > \delta\}$ still provide a covering of Ω, i.e., $\Omega = \bigcup_{\ell\in\Lambda} I_\ell(\Omega'_\ell)$.

Note that every bounded domain Ω with a locally Lipschitz boundary satisfies the above conditions for suitable μ and δ. Indeed, in this case every point inside the domain belongs to a cube contained in Ω, and every point on the boundary of Ω has a neighborhood whose intersection with the boundary is the graph of a Lipschitz continuous function [1]. By choosing a suitable cube inside this neighborhood, and then extracting a finite cover thanks to the compactness of $\overline{\Omega}$, we will get the desired sets Ω_ℓ and isometries I_ℓ. However, the parameter δ introduced here plays a prominent role in our analysis as it provides an upper bound on the size of subsets for which various estimates hold; see e.g., Lemma 2.3 and equation (14). Therefore, for any given domain it is desirable to have δ as large as possible. It is not difficult to show, for example, that for the unit disk in 2D the above definition holds with any $\delta < \sqrt{2}/2$.

Let $p, p' \in [1,\infty]$ be a pair of *conjugate exponents*, related by $1/p + 1/p' = 1$. As usual, we set $1/p = 0$ for $p = \infty$. The *Sobolev space* $W_p^n(\Omega)$ of order $n \in \mathbb{N}$ is the closure of the set of smooth functions on Ω with respect to the norm

$$\|f\|_{W_p^n(\Omega)} := \sum_{k\le n} |f|_{W_p^k(\Omega)}, \quad |f|_{W_p^k(\Omega)} := \sum_{|\alpha|=k} \|f^{(\alpha)}\|_{L^p(\Omega)},$$

where $|\alpha| = \alpha_1 + \cdots + \alpha_d$ and $f^{(\alpha)} := \frac{\partial^{|\alpha|} f}{\partial^{\alpha_1} x_1 \cdots \partial^{\alpha_d} x_d}$.

Let $\mathbb{P}$ be the space of real-valued d-variate polynomials. We define the subspace $\mathbb{P}^n$ of polynomials of *coordinate order* n and the subspace $\tilde{\mathbb{P}}^n$ of polynomials of *total order* n by

$$\mathbb{P}^n := \{\pi \in \mathbb{P} : \pi^{(\alpha)} = 0 \text{ for all } \alpha \text{ with } \max_i \alpha_i = n\},$$
$$\tilde{\mathbb{P}}^n := \{\pi \in \mathbb{P} : \pi^{(\alpha)} = 0 \text{ for all } \alpha \text{ with } |\alpha| = n\},$$

respectively. Clearly, $\tilde{\mathbb{P}}^n \subset \mathbb{P}^n$.

Throughout the paper, the order $n \in \mathbb{N}$, the space dimension $d \ge 2$, the exponent $p \in [1,\infty]$, and the domain Ω according to the above construction, are regarded as fixed parameters. Equally, some *size factor* $r > 1$ and some bound $\varrho > 0$ on the *distortion* of knot sequences, to be introduced in the next section, are fixed. To formalize the concept of generic constants, we introduce relations $\preccurlyeq$ and $\succcurlyeq$, defined as follows. Given the fixed parameters $n, d, p, \Omega, r, \varrho$, it is

$$A \preccurlyeq B \quad \text{and} \quad B \succcurlyeq A$$

if and only if there exists a positive real constant c such that $A \le cB$ for any instance of the real-valued terms A and B within some range defined in the context.

Definition 2.1. Given a continuous function $\zeta : (0,1)^{d-1} \to [1,2]$, and an isometry $I : \mathbb{R}^d \to \mathbb{R}^d$, the corresponding *graph-bounded set* $\gamma \subset \mathbb{R}^d$ *with scaling factor* $q > 0$ is defined by

$$\gamma := I(q\gamma_*), \quad \gamma_* := \big\{(y,z) \in (0,1)^{d-1} \times \mathbb{R} : 0 < z < \zeta(y)\big\}.$$

The *Bramble-Hilbert Lemma* is the key to establishing local approximation properties of splines. In principle, the following variant for the graph-bounded sets could be derived from results in [22], but we include a proof for the sake of completeness.

Lemma 2.2. *For any graph-bounded set γ with scaling factor q, and for any function $f \in W_p^n(\gamma)$, there exists a polynomial $\pi \in \tilde{\mathbb{P}}^n$ with*

$$|f-\pi|_{W_p^m(\gamma)} \preccurlyeq q^{n-m}\,|f|_{W_p^n(\gamma)}, \quad m \le n. \tag{1}$$

Proof. Under isometries, $\tilde{\mathbb{P}}^n$ is invariant and Sobolev semi-norms change at most by a factor depending only on the order. Further, (1) is invariant with respect to scaling. Hence, without loss of generality, we may assume that the isometry I is the identity, and that $q = 1$, i.e., $\gamma = \gamma_*$. Let $\gamma_0 := (0,1)^d \subset \gamma$. By the Bramble-Hilbert Lemma [3], there exists a polynomial $\pi \in \tilde{\mathbb{P}}^n$ such that

$$|f-\pi|_{W_p^m(\gamma_0)} \preccurlyeq |f|_{W_p^n(\gamma_0)}, \quad m \le n. \tag{2}$$

We show that the same polynomial π satisfies the required estimate on γ. To this end, we prove

$$|f-\pi|_{W_p^m(\gamma)} \preccurlyeq |f|_{W_p^n(\gamma)}, \quad m \le n,$$

by induction on m, decrementing from the case $m = n$, which is trivial. Assume that the assertion is true for some $m \le n$. For any multi-index α of total order $|\alpha| = m-1$, consider the function $\Delta := f^{(\alpha)} - \pi^{(\alpha)}$. For $y \in Y := (0,1)^{d-1}$ and $0 < z < \zeta(y)$, let

$$\Delta_1(y,z) := \Delta(y, z/\zeta(y)), \quad \Delta_2(y,z) := \int_0^{\zeta(y)} |\partial_z \Delta(y,t)|\,dt.$$

Clearly,

$$|\Delta(y,z) - \Delta_1(y,z)| = \Big|\int_{z/\zeta(y)}^{z} \partial_z \Delta(y,t)\,dt\Big| \le \Delta_2(y,z),$$

which implies $|\Delta| \le |\Delta_1| + |\Delta_2|$. First, substituting $u = z/\zeta(y)$ and using (2), we obtain

$$\begin{aligned}\|\Delta_1\|^p_{L^p(\gamma)} &\le \int_Y \int_0^{\zeta(y)} |\Delta(y, z/\zeta(y))|^p\,dzdy \le 2\int_Y \int_0^1 |\Delta(y,u)|^p\,dudy \\ &= 2\,\|\Delta\|^p_{L^p(\gamma_0)} \preccurlyeq |f|^p_{W_p^n(\gamma_0)} \le |f|^p_{W_p^n(\gamma)}.\end{aligned}$$

Second, by Hölder's inequality and the induction hypothesis,

$$\begin{aligned}\|\Delta_2\|^p_{L^p(\gamma)} &= \int_Y \int_0^{\zeta(y)} |\Delta_2(y,z)|^p\,dzdy \le 2^{p/p'} \int_Y \int_0^{\zeta(y)} \int_0^{\zeta(y)} |\partial_z \Delta(y,t)|^p\,dtdzdy \\ &\le 2^{1+p/p'} \int_Y \int_0^{\zeta(y)} |\partial_z \Delta(y,t)|^p\,dtdy = 2^p \|\partial_z \Delta\|^p_{L^p(\gamma)} \preccurlyeq |f|^p_{W_p^n(\gamma)}.\end{aligned}$$

Combining the two estimates and summing over all α concludes the proof. □

The *size* $|\omega|$ of a set $\omega \subset \Omega$ is defined as the max-norm of the diagonal of its bounding box. Polynomial approximation in a neighborhood of sufficiently small subsets of Ω will be established by the following observation:

Lemma 2.3. *For any subset $\gamma \subset \Omega$ of size $|\gamma| \le \delta/(2\sqrt{d})$, there exists a graph-bounded set γ^* with scaling factor $q := \sqrt{d}|\gamma|$ and size $|\gamma^*| \le (d+1)|\gamma|$, such that $\gamma \subset \gamma^* \subset \Omega$. Hence, there exists a polynomial $\pi \in \tilde{\mathbb{P}}^n$ such that*

$$|f - \pi|_{W_p^m(\gamma)} \preccurlyeq |\gamma|^{n-m} |f|_{W_p^n(\gamma^*)}, \quad m \le n.$$

Proof. Let the index $\ell \in \Lambda$ be chosen such that $\gamma \cap I_\ell(\Omega'_\ell)$ is not empty. There exists a cube $\gamma' := (y', z') + (0, q)^d$ of size q containing the pre-image of γ, i.e., $I_\ell^{-1}(\gamma) \subset \gamma'$. Since $q \le \delta/2$ and γ' contains points in Ω'_ℓ, we have $q \le y' \le \eta_\ell - q$ and $z' \ge q$. Hence,

$$\gamma'' := \big\{(y, z) \in (y', y' + q)^{d-1} \times \mathbb{R} : z' - q < z < \min(z' + q, \zeta_\ell(y))\big\}$$

is a graph-bounded set with scaling factor q and $I_\ell^{-1}(\gamma) \subset \gamma'' \subset \Omega_\ell$, implying that $\gamma^* := I_\ell(\gamma'')$ is a graph-bounded set with scaling factor q and $\gamma \subset \gamma^* \subset \Omega$. The size of γ^* is bounded by $q\sqrt{d+1} \le (d+1)|\gamma|$. The last statement follows from Lemma 2.2. □

3. Extended B-splines

In this section, we give a brief introduction to the construction of extended B-splines and to some of their properties. More details on this topic can be found in the web-spline literature, e.g., in [13], [14].

Let

$$T := [T^1, T^2, \ldots, T^d]$$

be a multivariate *knot sequence* for tensor product splines on $\mathbb{R}^d$. For simplicity, we assume that the knots t_i^ι forming the bi-infinite sequence T^ι are strictly monotone increasing and diverging, i.e.,

$$t_i^\iota < t_{i+1}^\iota, \quad i \in \mathbb{Z},$$

and

$$\lim_{i \to -\infty} t_i^\iota = -\infty, \quad \lim_{i \to \infty} t_i^\iota = \infty$$

for all $\iota = 1, \ldots, d$. The *grid cell* Γ_k corresponding to the index $k = (k^1, \ldots, k^d) \in \mathbb{Z}^d$ is defined as the half-open box $\Gamma_k := [t_{k^1}^1, t_{k^1+1}^1) \times \cdots \times [t_{k^d}^d, t_{k^d+1}^d)$. Let $l_{k^\iota}^\iota := t_{k^\iota+1}^\iota - t_{k^\iota}^\iota, \iota = 1, \ldots, d$, be the side lengths of Γ_k. We assume that the cells are uniformly bounded, and define the *grid width* h as the maximal side length of all cells,

$$h := \sup_{k \in \mathbb{Z}^d} \max_{\iota = 1, \ldots, d} l_{k^\iota}^\iota.$$

The *distortion* of the knot sequence T, defined as the maximal ratio of side lengths, is assumed to be bounded by some constant ϱ,

$$\big(\inf_{k \in \mathbb{Z}^d} \min_{\iota = 1, \ldots, d} l_{k^\iota}^\iota\big)^{-1} h \le \varrho.$$

Thus, a lower bound for all side lengths is $l_{k^\iota}^\iota \ge h/\varrho$. Throughout, the grid width $h \in (0, h_0)$ is regarded as a variable, while the bound ϱ on the distortion is one of the fixed parameters. A specific value for the maximal grid width h_0 will be given in (14).

In the following definition of extended B-splines, we will not only consider the domain Ω but also certain subsets thereof whose size is comparable to the grid width. These subsets will be used for local approximations in the first stage of the

two-stage methods described in Section 4. Given some *size factor* $r > 1$, belonging to the list of fixed parameters, we define

$$\mathcal{W}_T := \big\{\omega \subset \Omega : \omega \text{ is measurable and contains a grid cell } \Gamma_k\big\},$$
$$\widetilde{\mathcal{W}}_T := \big\{\omega \subset \Omega : \omega \text{ is measurable and } |\omega| \le rh\big\},$$
$$\mathcal{W}_T^* := \mathcal{W}_T \cap \widetilde{\mathcal{W}}_T.$$

Subsets $\omega \in \widetilde{\mathcal{W}}_T$ are called *local sets* and those in $\mathcal{W}_T^*$ *local domains*. Throughout, to avoid trivial cases, we assume that the knot sequence is chosen fine enough to guarantee that Ω contains at least one grid cell, i.e., $\mathcal{W}_T$ and $\mathcal{W}_T^*$ are not empty. In particular, $\Omega \in \mathcal{W}_T$.

For $k \in \mathbb{Z}^d$, the *multivariate tensor product B-spline* of coordinate order $n \in \mathbb{N}$ with respect to the knot sequence T is denoted by

$$b_k(x) := b^1_{k^1}(x^1) \cdots b^d_{k^d}(x^d),$$

where each $b^\iota_{k^\iota}$ is a univariate B-spline of order n with knots T^ι. Its *support* is the box

$$s_k := [t^1_{k^1}, t^1_{k^1+n}] \times \cdots \times [t^d_{k^d}, t^d_{k^d+n}].$$

Given any $\omega \in \mathcal{W}_T$, *restricted grid cells* and *restricted supports* are defined by

$$\Gamma_{\omega,k} := \Gamma_k \cap \omega, \quad s_{\omega,k} := s_k \cap \omega, \quad k \in \mathbb{Z}^d,$$

respectively. With

$$K_\omega := \{k \in \mathbb{Z}^d : s_{\omega,k} \neq \emptyset\}$$

the index set of *relevant* B-splines, the space of restrictions to ω of all tensor product splines of coordinate order n with respect to the knot sequence T is given by

$$\mathcal{B}^n_\omega := \operatorname{span}\{b_{k|\omega} : k \in K_\omega\}.$$

Multivariate *extended B-splines (EB-splines)* introduced by Höllig et al. [15, 14] form a stable basis of a subspace of $\mathcal{B}^n_\omega$, which is sufficiently large to provide full approximation power. For the sake of completeness, we briefly recall here the construction. The basic idea is to adjoin the splines with small support in ω to those whose supports overlap significantly with ω. More precisely, the relevant B-splines are divided into two categories, namely the *inner B-splines* with indices in the set

$$I_\omega := \big\{i \in \mathbb{Z}^d : s_{\omega,i} \text{ contains a grid cell } \Gamma_k\big\},$$

and the *outer B-splines* with indices in $J_\omega := K_\omega \setminus I_\omega$. A grid cell Γ_k is called *inner grid cell* if it is entirely contained in ω, i.e., $\Gamma_k = \Gamma_{\omega,k}$. The *EB-splines* $B_{\omega,i} : \omega \to \mathbb{R}$ are linear combinations of the inner B-splines b_i with outer B-splines,

$$B_{\omega,i} := b_{i|\omega} + \sum_{j \in J_\omega} e_{i,j} b_{j|\omega}, \quad i \in I_\omega.$$

The weights $e_{i,j}$, called *extension coefficients*, are given by

$$e_{i,j} := \lambda^*_j p_{i,j}.$$

Here, λ^*_j is the de Boor-Fix functional (see below) corresponding to the B-spline b_j, and $p_{i,j}$ is the polynomial in $\mathbb{P}^n$ that agrees with b_i on the inner grid cell "closest" in a sense to the center of the support of b_j; see [15, 14]. The support of $B_{\omega,i}$ is denoted by $S_{\omega,i}$, and the relation

$$s_{\omega,i} \subset S_{\omega,i}$$

accounts for the "E" in EB-splines. By construction, each support $S_{\omega,i}$ contains at least one inner grid cell. Below, Γ_i' denotes one of these inner grid cells,

$$\Gamma_i' \subset S_{\omega,i}, \quad i \in I_\omega. \tag{3}$$

The choice of Γ_i' is arbitrary in the sense that it does not affect the qualitative form of our estimates. However, in applications, an appropriate choice might yield quantitative improvement.

The space ${}^e\mathcal{B}_\omega^n$ of *extended splines* on ω is spanned by the set of EB-splines,

$${}^e\mathcal{B}_\omega^n := \operatorname{span}\{B_{\omega,i} : i \in I_\omega\} \subset \mathcal{B}_\omega^n.$$

It is important to note that ${}^e\mathcal{B}_\omega^n$ includes the space of all polynomials of coordinate order n on ω,

$$\mathbb{P}^n \subset {}^e\mathcal{B}_\omega^n. \tag{4}$$

Collecting all EB-splines in a column vector $B_\omega := [B_{\omega,i}]_{i\in I_\omega}$ and a sequence of real *control points* in a row vector $a_\omega := [a_i]_{i\in I_\omega}$, extended splines can be written as

$$a_\omega B_\omega := \sum_{i\in I_\omega} a_i B_{\omega,i} \in {}^e\mathcal{B}_\omega^n.$$

Both for local domains $\omega \in \mathcal{W}_T^*$ and for the global domain Ω, EB-splines are bounded in the following way:

Lemma 3.1. *For $\omega \in \mathcal{W}_T^* \cup \{\Omega\}$, the size of the support of EB-splines satisfies*

$$h \preccurlyeq |S_{\omega,i}| \preccurlyeq h, \quad i \in I_\omega.$$

The extension coefficients are bounded by

$$\sum_{j\in J_\omega} |e_{i,j}| \preccurlyeq 1, \quad i \in I_\omega. \tag{5}$$

Proof. Clearly, $|S_{\omega,i}| \geq h/\varrho$. In the local case $\omega \in \mathcal{W}_T^*$, we have $|S_{\omega,i}| \leq rh$ by definition of $\mathcal{W}_T^*$. The bound on the extension coefficients can be established as follows: By affine invariance of the EB-splines construction, we may assume $h = 1$ without loss of generality. The extension coefficients depend continuously on a finite number of knots so that boundedness is implied by a compactness argument. In the global case $\omega = \Omega$, the proof follows immediately by specializing the arguments in [14] to the case of knot sequences with bounded distortion. □

We note that the constants hidden in the inequalities of the lemma depend crucially on r when $\omega \in \mathcal{W}_T^*$, and on μ when $\omega = \Omega$.

The next lemma summarizes the key stability properties of EB-splines: Up to a normalization factor, they are uniformly stable with respect to p-norms, and satisfy a Bernstein-type inequality.

Lemma 3.2. *For any set $\omega \in \mathcal{W}_T^* \cup \{\Omega\}$, any sequence a_ω of control points, and any $m \leq n$,*

$$h^{d/p}\|a_\omega\|_p \preccurlyeq \|a_\omega B_\omega\|_{L^p(\omega)} \preccurlyeq h^{d/p}\|a_\omega\|_p, \tag{6}$$

$$|a_\omega B_\omega|_{W_p^m(\omega)} \preccurlyeq h^{d/p-m}\|a_\omega\|_p. \tag{7}$$

Proof. The estimate (6) is an immediate consequence of Theorem 9 in [14]. To prove (7), we only consider the case $p < \infty$, which is slightly more involved than $p = \infty$. Let

$$I_k := \{i \in I_\omega : \Gamma_{\omega,k} \cap S_{\omega,i} \neq \emptyset\},$$
$$K_i := \{k \in K_\omega : \Gamma_{\omega,k} \cap S_{\omega,i} \neq \emptyset\},$$

and $a^k := [a_i]_{i \in I_k}$. First, the number of indices in I_k is $\#I_k = n^d$ so that $\|a^k\|_1 \leq n^{d/p'}\|a^k\|_p$. Second, it is known that $\|b_k^{(\alpha)}\|_{L^\infty(\mathbb{R}^d)} \preccurlyeq h^{-|\alpha|}$ for any $k \in \mathbb{Z}^d$ and any multi-index α with $|\alpha| = m$. Hence, by (5),

$$\|B_{\omega,i}^{(\alpha)}\|_{L^\infty(\mathbb{R}^d)} \preccurlyeq h^{-|\alpha|}, \qquad i \in I_\omega.$$

Third, the volume of $\Gamma_{\omega,k}$ is bounded by $\mathrm{vol}(\Gamma_{\omega,k}) \leq h^d$. Together, we obtain

$$\|a_\omega B_\omega^{(\alpha)}\|_{L^p(\Gamma_{\omega,k})} \preccurlyeq h^{-|\alpha|}\,\mathrm{vol}(\Gamma_{\omega,k})^{1/p}\|a^k\|_1 \leq h^{d/p-|\alpha|}\|a^k\|_p.$$

Therefore,

$$\begin{aligned}
\|a_\omega B_\omega^{(\alpha)}\|_{L^p(\omega)}^p &= \sum_{k\in\mathbb{Z}^d} \Big\| \sum_{i\in I_\omega} a_{\omega,i} B_{\omega,i}^{(\alpha)} \Big\|_{L^p(\Gamma_{\omega,k})}^p \\
&\preccurlyeq h^{d-|\alpha|p} \sum_{k\in\mathbb{Z}^d} \sum_{i\in I_k} |a_{\omega,i}|^p = h^{d-|\alpha|p} \sum_{i\in I_\omega} \sum_{k\in K_i} |a_{\omega,i}|^p \\
&\leq h^{d-|\alpha|p} \sum_{i\in I_\omega} \#K_i\, |a_{\omega,i}|^p.
\end{aligned}$$

By Lemma 3.1, the side lengths of supports are bounded by $S_{\omega,i} \preccurlyeq h$, while the side lengths of grid cells are bounded by $l_{k^\iota}^\iota \geq h/\varrho$. Hence, we obtain $\#K_i \preccurlyeq 1$, and the proof is complete. □

We define the *de Boor-Fix functionals* λ_i^* corresponding to global EB-splines B_Ω as follows: For a sufficiently smooth function f, let

$$\lambda_i^* f := \sum_{\|\alpha\|_\infty < n} (-1)^{(n-1)d-|\alpha|} \psi_i^{(n-1-\alpha)}(\tau_i) f^{(\alpha)}(\tau_i), \quad i \in I_\Omega. \tag{8}$$

Here, $\psi_i(x) := \psi_i^1(x^1)\cdots\psi_i^d(x^d)$,

$$\psi_i^\iota(x^\iota) := \frac{1}{(n-1)!} \prod_{l=1}^{n-1} (t_{i^\iota+l}^\iota - x^\iota),$$

$n-1-\alpha := (n-1-\alpha_1, \ldots, n-1-\alpha_d)$, and τ_i is an arbitrary point in the interior of $s_{\Omega,i}$. These functionals are bi-orthogonal to standard tensor product B-splines [2, Lemma IX.1], and hence also to EB-splines,

$$\lambda_i^* B_{\Omega,k} = \delta_{i,k}, \quad i,k \in I_\Omega.$$

While being useful for many theoretical purposes, the de Boor-Fix functionals are of limited use in practice since they are only applicable to functions which are, at least locally, continuously differentiable up to order $(n-1, \ldots, n-1)$. This limitation can be overcome, for instance, by prepending an approximating polynomial, such as the average Taylor polynomial [3], before applying λ_i^*. Here, we suggest a different process: Since tensor-product polynomials are reproduced by EB-splines, it is natural, and indeed computationally more efficient to use the L^2-projection of f to the space of polynomials $\mathbb{P}^n$ as an intermediate approximation.

More precisely, let p^i_α denote the normalized tensor product Legendre polynomials of degree $\alpha \in \mathbb{N}_0^d$ on the inner grid cell $\Gamma'_i \subset S_{\Omega,i}$,

$$\int_{\Gamma'_i} p^i_\alpha p^i_\beta = \delta_{\alpha,\beta}, \quad \alpha,\beta \in \mathbb{N}_0^d, \quad i \in I_\Omega.$$

Then the local L^2-projection operators $\mathcal{L}_i : L^1(\Gamma'_i) \to \mathbb{P}^n$ are given by

$$\mathcal{L}_i f = \sum_{\|\alpha\|_\infty < n} \Big(\int_{\Gamma'_i} p^i_\alpha f \Big) p^i_\alpha, \quad i \in I_\Omega.$$

We assume that the points τ_i in (8) satisfy $\tau_i \in \Gamma'_i$, $i \in I_\Omega$, and define the functionals $\lambda_i : L^1(\Gamma'_i) \to \mathbb{R}$ by

$$\lambda_i f := \lambda_i^*(\mathcal{L}_i f) = \int_{\Gamma'_i} p_i f, \qquad p_i := \sum_{\|\alpha\|_\infty < n} (\lambda_i^* p^i_\alpha) p^i_\alpha \in \mathbb{P}^n.$$

For any function $f \in L^1(\Omega)$, we set $\lambda_i(f) := \lambda_i(f_{|\Gamma'_i})$.

Besides being applicable to functions which are barely integrable, these functionals have the following properties:

Lemma 3.3. *The functionals λ_i are biorthogonal to EB-splines,*

$$\lambda_i B_{\Omega,k} = \delta_{i,k}, \quad i,k \in I_\Omega. \tag{9}$$

Further, they reproduce polynomials according to

$$\sum_{i \in I_\Omega} (\lambda_i \pi) B_{\Omega,i} = \pi \quad \textit{for any} \quad \pi \in \mathbb{P}^n, \tag{10}$$

and are bounded on $L^p(\Gamma'_i)$ by

$$|\lambda_i f| \preccurlyeq h^{-d/p} \|f\|_{L^p(\Gamma'_i)}. \tag{11}$$

Proof. Clearly, $\lambda_i \pi = \lambda_i^*(\mathcal{L}_i \pi) = \lambda_i^* \pi$ for any $\pi \in \mathbb{P}^n$. Hence, $\lambda_i B_{\Omega,k} = \lambda_i(B_{\Omega,k|\Gamma'_i}) = \lambda_i^*(B_{\Omega,k|\Gamma'_i}) = \delta_{i,k}$, which proves (9). By (4), $\pi = a_\Omega B_\Omega$ for certain coefficients a_Ω, and hence

$$\sum_{i \in I_\Omega} (\lambda_i a_\Omega B_\Omega) B_{\Omega,i} = \sum_{i \in I_\Omega} a_i B_{\Omega,i} = \pi.$$

The estimate (11) is invariant under scaling and shifting knots. Hence, we may assume $\Gamma'_i = [0,1]^d$ without loss of generality. The number of knots influencing the polynomial p_i is at most $(n-1)^d$ and, by boundedness of the distortion, they all lie in the compact set $[-n\varrho, n\varrho]^d$. Hence, since p_i is depending continuously on these knots, $\|p_i\|_{L^{p'}(\Gamma'_i)} \preccurlyeq 1$, and (11) follows from Hölder's inequality. □

4. Two-stage methods

Let $P_i : F(\omega_i) \to L^p(\Gamma'_i)$, $i \in I_\Omega$, be a sequence of *local approximation operators*, where $\Gamma'_i \subset S_{\Omega,i}$ as in (3), each local domain $\omega_i \in \mathcal{W}_T^*$ satisfies $\Gamma'_i \subset \omega_i$, and $F(\omega_i) \subset L^1(\omega_i)$ is a suitable function space. Thus, beforehand, we assume essentially nothing but that each local approximation $P_i(f_{|\omega_i})$, $i \in I_\Omega$, is L^p-integrable on the inner grid cell $\Gamma'_i \subset S_{\Omega,i}$. Keeping in mind that the operator P_i must not make use of function values outside the local domain ω_i, we write $P_i f$ or $P_i(f)$instead if $P_i(f_{|\omega_i})$ to simplify notation.

A two-stage method for EB-spline approximation proceeds as follows: First, the local approximations $P_i(f)$ are determined. Second, a corresponding extended

spline is computed by applying suitable dual functionals, for example, λ_i defined in Section 3, to $P_i(f)$.

Definition 4.1. The *two-stage method* $\mathcal{P}$ corresponding to the local approximation operators $[P_i]_{i\in I_\Omega}$ is defined by

$$\mathcal{P}f := \sum_{i\in I_\Omega} (\lambda_i P_i(f_{|\omega_i}))B_{\Omega,i}. \tag{12}$$

The functionals λ_i used here could be replaced by any sequence of functionals corresponding to a quasi-interpolant of order n, like the de Boor-Fix functionals λ_i^*. However, our special choice guarantees a wide range of applicability by assuming low regularity of f and $P_i(f)$, and the results and arguments are prototypical.

Now, we are going to derive estimates on the error of the spline approximation

$$\Delta := f - \mathcal{P}f$$

from the errors of the local approximations

$$\Delta_i := f - P_i f, \qquad i \in I_\Omega.$$

For the sake of convenience, we introduce the notation

$$\Delta_{i,p} := \|\Delta_i\|_{L^p(\Gamma_i')}, \quad \Delta_{\Omega,p} := [\Delta_{i,p}]_{i\in I_\Omega}, \quad \|\Delta_{\Omega,p}\|_p = \Big(\sum_{i\in I_\Omega} \Delta_{i,p}^p\Big)^{1/p}.$$

We show that the Sobolev error of a two-stage method can be split into two terms, one of which is similar to the $\mathcal{O}(h^{n-m})$-error of the best approximation by EB-splines, and the second one that depends on the local errors Δ_i.

Theorem 4.2. *For any function $f \in W_p^n(\Omega)$, the error $\Delta = f - \mathcal{P}f$ is bounded by*

$$|\Delta|_{W_p^m(\Omega)} \preccurlyeq h^{n-m}\big(|f|_{W_p^n(\Omega)} + h^{-n}\|\Delta_{\Omega,p}\|_p\big), \quad m \le n. \tag{13}$$

The proof is postponed until after Theorem 4.3 that gives a local error bound.

According to Lemma 3.1 there exists a constant $c > 0$ depending only on the fixed parameters n, d, p, Ω, ϱ such that $|S_{\Omega,i}| \le ch$ for all $i \in I_\Omega$. In the following, we assume that the grid width h is sufficiently small:

$$h \le h_0 := \frac{\delta}{2\sqrt{d}\,(r+2c)}. \tag{14}$$

For any $\sigma \in \widetilde{\mathcal{W}}_T$, let

$$\gamma := \sigma \cup \bigcup_{i\in I_\Omega[\sigma]} \Gamma_i',$$

where $I_\Omega[\sigma]$ denotes the set of indices corresponding to EB-splines not vanishing on σ,

$$I_\Omega[\sigma] := \{i \in I_\Omega : S_{\Omega,i} \cap \sigma \ne \emptyset\}.$$

Since $|S_{\Omega,i}| \le ch$, we have

$$|\gamma| \le |\sigma| + 2\max_{i\in I_\Omega[\sigma]} |S_{\Omega,i}| \le (r+2c)h \le \frac{\delta}{2\sqrt{d}}.$$

Thus, by Lemma 2.3, there exists a graph-bounded set γ^* with scaling factor $\sqrt{d}|\gamma| \le \sqrt{d}(r+2c)h$ such that $\sigma \subset \gamma \subset \gamma^* \subset \Omega$. Lemma 2.2 guarantees

$$|f - \pi|_{W_p^m(\gamma^*)} \preccurlyeq h^{n-m}|f|_{W_p^n(\gamma^*)}, \quad m \le n, \tag{15}$$

for any function $f \in W_p^n(\gamma^*)$ and a suitable $\pi \in \mathbb{P}^n$. Note that the size of γ^* is bounded by

$$|\gamma^*| \le (d+1)|\gamma| \le 2d(r+2c)h \preccurlyeq h, \tag{16}$$

Theorem 4.3. *Let σ be any local subset of Ω and γ^* the corresponding graph-bounded set as defined above. Then*

$$|\Delta|_{W_p^m(\sigma)} \preccurlyeq h^{n-m}\big(|f|_{W_p^n(\gamma^*)} + h^{-n} \max_{i\in I_\Omega[\sigma]} \Delta_{i,p}\big), \quad m \le n, \tag{17}$$

for any function $f \in W_p^n(\gamma^*)$.

Proof. Let $\pi \in \mathbb{P}^n$ be the polynomial approximating f on γ^* according to Lemma 2.2, and set $\varepsilon := f - \pi$. Reproduction of polynomials according to (10) leads to the representation

$$\Delta = \varepsilon - \sum_{i\in I_\Omega} (\lambda_i \varepsilon) B_{\Omega,i} + \sum_{i\in I_\Omega} (\lambda_i \Delta_i) B_{\Omega,i}$$

of the error. Hence, for $m \le n$ and $p < \infty$, the Bernstein inequality (7), applied to $\sum_{i\in I_\Omega[\sigma]} (\lambda_i\varepsilon) B_{\Omega,i}$ and $\sum_{i\in I_\Omega[\sigma]} (\lambda_i\Delta_i) B_{\Omega,i}$, yields

$$|\Delta|_{W_p^m(\sigma)} \preccurlyeq |\varepsilon|_{W_p^m(\sigma)} + h^{d/p-m}\Big(\Big(\sum_{i\in I_\Omega[\sigma]} |\lambda_i\varepsilon|^p\Big)^{1/p} + \Big(\sum_{i\in I_\Omega[\sigma]} |\lambda_i\Delta_i|^p\Big)^{1/p}\Big).$$

The number of indices in $I_\Omega[\sigma]$ is bounded by $\#I_\Omega[\sigma] \le (r\varrho + n)^d \preccurlyeq 1$. Hence, by equivalence of norms on $\mathbb{R}^{\#I_\Omega[\sigma]}$, we obtain the estimate

$$|\Delta|_{W_p^m(\sigma)} \preccurlyeq |\varepsilon|_{W_p^m(\sigma)} + h^{d/p-m}\big(\max_{i\in I_\Omega[\sigma]} |\lambda_i\varepsilon| + \max_{i\in I_\Omega[\sigma]} |\lambda_i\Delta_i|\big),$$

which is also valid for $p = \infty$. We obtain using (11) that

$$|\Delta|_{W_p^m(\sigma)} \preccurlyeq |\varepsilon|_{W_p^m(\sigma)} + h^{-m}\big(\max_{i\in I_\Omega[\sigma]} \|\varepsilon\|_{L^p(\Gamma_i')} + \max_{i\in I_\Omega[\sigma]} \|\Delta_i\|_{L^p(\Gamma_i')}\big).$$

Since $\Gamma_i' \subset \gamma^*$ for all $i \in I_\Omega[\sigma]$, the desired estimate follows from (15). The case $p = \infty$ can be proven in a similar way. □

We are now ready to prove our estimate for the global error.

Proof of Theorem 4.2. We only consider the case $p < \infty$ as it is slightly more difficult than $p = \infty$. We use the restricted grid cells as local subsets, $\sigma_k := \Gamma_{\Omega,k} \in \widetilde{\mathcal{W}}_T$, and write

$$|\Delta|^p_{W_p^m(\Omega)} = \sum_k |\Delta|^p_{W_p^m(\sigma_k)}.$$

By Theorem 4.3 and the equivalence of norms,

$$|\Delta|^p_{W_p^m(\Omega)} \preccurlyeq h^{(n-m)p}\Big(\sum_k |f|^p_{W_p^m(\gamma_k^*)} + h^{-np} \sum_k \max_{i\in I_\Omega[\sigma_k]} \Delta^p_{i,p}\Big).$$

Since $\Gamma_{\Omega,k} \subset \gamma_k^*$ and $|\gamma_k^*| \le 2d(r+2c)h$ (see (16)), the number of sets γ_k^* containing any given point $x \in \Omega$ is bounded by some constant. Equally, the number of times every term $\Delta^p_{i,p}, i \in I_\Omega$, appears in the second sum is bounded by another constant. Hence,

$$|\Delta|^p_{W_p^m(\Omega)} \preccurlyeq h^{(n-m)p}\Big(|f|^p_{W_p^n(\Omega)} + h^{-np} \sum_{i\in I_\Omega} \Delta^p_{i,p}\Big),$$

and the claim follows by the equivalence of norms, again. □

Remark 4.4. As mentioned before, the dual functionals λ_i in the definition of the two-stage method $\mathcal{P}$ could be replaced by other families of functionals and, in particular, by the de Boor-Fix functionals λ_i^*. These functionals can be applied if $P_i f$ is sufficiently smooth. Using similar arguments as above, one can show the error bounds

$$|\Delta|_{W_\infty^m(\Omega)} \preccurlyeq h^{n-m}\Big(|f|_{W_\infty^n(\Omega)} + \max_{i\in I_\Omega} \sum_{\|\alpha\|_\infty<n} h^{-n+|\alpha|}\left|\Delta_i^{(\alpha)}(\tau_i)\right|\Big),$$

if $f \in W_\infty^n(\Omega)$, and

$$|\Delta|_{W_\infty^m(\sigma)} \preccurlyeq h^{n-m}\Big(|f|_{W_\infty^n(\gamma^*)} + \max_{i\in I_\Omega[\sigma]} \sum_{\|\alpha\|_\infty<n} h^{-n+|\alpha|}\left|\Delta_i^{(\alpha)}(\tau_i)\right|\Big),$$

if $f \in W_\infty^n(\gamma^*)$, analogous to (13) and (17), respectively. Recall that τ_i are *arbitrarily* chosen points in the interiors of $s_{\Omega,i}$. This freedom can be used to obtain particularly local error bounds. For example, assume that $x \in \Omega$ lies in an inner grid cell $\Gamma_{\Omega,k}$, and $\sigma_x \subset \Gamma_{\Omega,k}$ is any open cube centered at x. Then we may choose $\gamma_x^* := \sigma_x$ as enclosing graph-bounded set. Further, it is possible to choose $\tau_i = x, i \in I_\Omega[\sigma_x]$, to obtain

$$|\Delta^{(m)}(x)| \preccurlyeq h^{n-m}\Big(|f|_{W_\infty^n(\sigma_x)} + \max_{i\in I_\Omega[\sigma_x]} \sum_{\|\alpha\|_\infty<n} h^{-n+|\alpha|}\left|\Delta_i^{(\alpha)}(x)\right|\Big).$$

Now, we consider two-stage methods with additional properties. Recalling the bound (14) on the grid width h, we note that the local domains $\omega_i \in \mathcal{W}_T^*$ used to define the local approximation operators P_i are bounded by $|\omega_i| \le rh \le \delta/(2\sqrt{d})$. The enclosing graph-bounded domains corresponding to the ω_i according to Lemma 2.3 are denoted by $\omega_i^*, i \in I_\Omega$.

Definition 4.5. A two-stage method $\mathcal{P}$ is said to be *of type* (n,p) if

- the local approximation operators reproduce polynomials according to

  $$P_i(\pi) = \pi$$

  for all $i \in I_\Omega$ and $\pi \in \mathbb{P}^n$, and
- there exists $\nu_p \ge 1$ such that

  $$\|P_i(f) - P_i(g)\|_{L^p(\Gamma_i')} \le \nu_p\left(\|f-g\|_{L^p(\omega_i)} + h^n|f-g|_{W_p^n(\omega_i)}\right)$$

  for all $i \in I_\Omega$ and $f, g \in W_p^n(\omega_i)$.

Note that ν_p is just a bound on the Lipschitz constants of the operators $P_i : W_p^n(\omega_i) \to L^p(\Gamma_i')$ with respect to suitably weighted Sobolev norms. For sequences of *linear* operators, as they are typically used in practice, ν_p is a bound on the norms of the operators P_i in the appropriate function spaces. In particular, the stronger condition

$$\|P_i f\|_{L^p(\Gamma_i')} \le \nu_p \|f\|_{L^p(\omega_i)} \tag{18}$$

implies (n,p)-type if P_i are linear operators.

For a two-stage method of type (n,p) the estimates of Theorems 4.2 and 4.3 simplify as follows:

Theorem 4.6. *Consider a two-stage method of type (n,p). For any local subset $\sigma \subset \Omega$ there is a graph-bounded set $\tilde{\sigma}$ containing σ, with $|\tilde{\sigma}| \preccurlyeq h$, such that the approximation error $\Delta := f - \mathcal{P}f$ σ is bounded by*

$$|\Delta|_{W_p^m(\sigma)} \preccurlyeq \nu_p h^{n-m} \, |f|_{W_p^n(\tilde{\sigma})}, \quad m \le n, \tag{19}$$

for any function $f \in W_p^n(\tilde{\sigma})$. Moreover,

$$|\Delta|_{W_p^m(\Omega)} \preccurlyeq \nu_p h^{n-m} \, |f|_{W_p^n(\Omega)}, \quad m \le n, \tag{20}$$

for any function $f \in W_p^n(\Omega)$.

Proof. For a fixed i, let π be the polynomial approximating f on ω_i^* according to Lemma 2.3. By reproduction of polynomials,

$$\Delta_i = (f - \pi) - (P_i(f) - P_i(\pi)) \quad \text{on} \quad \Gamma_i'.$$

Hence, with $\varepsilon := f - \pi$, the (n,p)-type and Lemma 2.3 yield

$$\begin{aligned}
\Delta_{i,p} &\le \|\varepsilon\|_{L^p(\Gamma_i')} + \|P_i(f) - P_i(\pi)\|_{L^p(\Gamma_i')} \\
&\le \|\varepsilon\|_{L^p(\Gamma_i')} + \nu_p\big(\|\varepsilon\|_{L^p(\omega_i)} + h^n|\varepsilon|_{W_p^n(\omega_i)}\big) \\
&\le (1+\nu_p)\big(\|\varepsilon\|_{L^p(\omega_i)} + h^n|\varepsilon|_{W_p^n(\omega_i)}\big) \\
&\preccurlyeq \nu_p h^n |f|_{W_p^n(\omega_i^*)}.
\end{aligned}$$

Substituting this estimate into (17) leads to (19), where

$$\tilde{\sigma} = \Big(\sigma \cup \bigcup_{i \in I_\Omega[\sigma]} \omega_i\Big)^*$$

is obtained according to Lemma 2.3. Similarly, the global bound (20) follows by substituting the above estimate into (13) and using the fact that the number of sets ω_i^*, $i \in I_\Omega$, containing any point $x \in \Omega$ is bounded by a constant. □

5. Local least squares

In this section, we discuss approximation properties of two-stage methods (12) based on quasi-interpolation with EB-splines B_Ω for the second stage, and least squares fits $P_i(f_{|\omega_i})$ with EB-splines associated with certain local sets ω_i for the first stage.

In general, local least squares fits $P_i(f_{|\omega_i})$ can be obtained with the help of various approximation tools, such as polynomials or radial basis functions; see e.g. [7, 5]. In this paper we study local approximations from ${}^e\mathcal{B}_{\omega_i}^n$, which has the big computational advantage that in this case the value of the dual functional $\lambda_i(P_i(f_{|\omega_i}))$ needed to form $\mathcal{P}f$ coincides with the coefficient a_i of the i-th local EB-spline in the expansion $P_i(f_{|\omega_i}) = a_{\omega_i} B_{\omega_i} \in {}^e\mathcal{B}_{\omega_i}^n$. Indeed, this follows from the fact that, since $\Gamma_i' \subset \omega_i$, the functional λ_i satisfies $\lambda_i B_{\omega_i,k} = \delta_{i,k}$ for all $k \in I_{\omega_i}$; see Lemma 3.3. Hence, as soon as all local approximations have been computed, the control points of the two-stage fit $\mathcal{P}f$ are obtained in no time by utilising appropriate coefficients of the local spline approximants. Note that methods with similar advantages have been discussed in [18, 7, 20, 17] in the context of different spline spaces.

5.1. **Continuous least squares.** We start with considering local approximation in the L^2-sense. As before, let $\omega_i \in \mathcal{W}_T^*, i \in I_\Omega$, denote the local domains used to define the two-stage method $\mathcal{P}$, and let Γ_i' denote the corresponding inner grid cells. It is important to note that, in general, ${}^e\mathcal{B}_{\omega_i}^n \not\subset {}^e\mathcal{B}_\Omega^n$ since the local rules for attaching outer to inner B-splines may differ from the global ones. Now, we define the operator

$$\tilde{P}_i : L^1(\omega_i) \ni f \mapsto \tilde{a}_{\omega_i} B_{\omega_i} \in {}^e\mathcal{B}_{\omega_i}^n$$

via the *Gramian system* $\tilde{G}\tilde{a}_{\omega_i}^T = \tilde{F}$, where

$$\tilde{G}_{j,k} := \int_{\omega_i} B_{\omega_i,j} B_{\omega_i,k}, \quad \tilde{F}_j := \int_{\omega_i} B_{\omega_i,j} f, \quad j,k \in I_{\omega_i}. \tag{21}$$

By Lemma 3.1, $|S_{\omega_i,j}| \succcurlyeq h$, while $|\omega_i| \preccurlyeq h$. Hence, the dimension of the Gramian system is bounded by some constant, $\#I_{\omega_i} \preccurlyeq 1$. Clearly, if $f \in L^2(\omega_i)$, then $\tilde{P}_i f$ is the best L^2-approximation of f in ${}^e\mathcal{B}_{\omega_i}^n$,

$$\|f - \tilde{P}_i f\|_{L^2(\omega_i)} = \inf_{s \in {}^e\mathcal{B}_{\omega_i}^n} \|f - s\|_{L^2(\omega_i)}.$$

It is easy to see that the two-stage method $\tilde{\mathcal{P}}$ corresponding to the local operators $\tilde{P}_i$, $i \in I_\Omega$, has all desired properties.

Theorem 5.1. *For any $p \in [1,\infty]$, the two-stage method $\tilde{\mathcal{P}}$ is of type (n,p), and $\nu_p \preccurlyeq 1$.*

Proof. Clearly, $\tilde{\mathcal{P}}$ reproduces polynomials of order n. Since $\tilde{P}_i$ is linear, it suffices to show that

$$\|\tilde{P}_i f\|_{L^p(\Gamma_i')} \preccurlyeq \|f\|_{L^p(\omega_i)}, \quad i \in I_\Omega,$$

for any $f \in L^p(\omega_i)$. That is, the constant ν_p depends only on the default parameters. Let us fix $i \in I_\Omega$ and drop the index i of $\omega = \omega_i$ to simplify notation. Using (6) for $p = 2$, the smallest eigenvalue $\tilde{\lambda}_{\min}$ of $\tilde{G}$ can be estimated from below by means of the Rayleigh quotient of $\tilde{G}$ and Lemma 3.2,

$$\tilde{\lambda}_{\min} = \min_{a_\omega \neq 0} \frac{\langle a_\omega \tilde{G}, a_\omega \rangle}{\|a_\omega\|_2^2} = \min_{a_\omega \neq 0} \frac{\|a_\omega B_\omega\|_{L^2(\omega)}^2}{\|a_\omega\|_2^2} \succcurlyeq h^d. \tag{22}$$

As shown above, the dimension of $\tilde{G}$ is bounded by a constant. Hence, by equivalence of norms, the inverse of $\tilde{G}$ is bounded by

$$\|\tilde{G}^{-1}\|_p \preccurlyeq \|\tilde{G}^{-1}\|_2 = \tilde{\lambda}_{\min}^{-1} \preccurlyeq h^{-d}.$$

Using Hölder's inequality and (6), we see that the components of $\tilde{F}$ are bounded by

$$|\tilde{F}_j| \leq \|B_{\omega,j}\|_{L^{p'}(\omega)} \|f\|_{L^p(\omega)} \preccurlyeq h^{d/p'} \|f\|_{L^p(\omega)}.$$

Consequently, $\|\tilde{a}_\omega\|_p \leq \|\tilde{G}^{-1}\|_p \|\tilde{F}\|_p \preccurlyeq h^{-d/p} \|f\|_{L^p(\omega)}$, and, using (6) again,

$$\|\tilde{P}_i f\|_{L^p(\Gamma_i')} \leq \|\tilde{a}_\omega B_\omega\|_{L^p(\omega)} \preccurlyeq \|f\|_{L^p(\omega)}. \qquad \square$$

Lemma 3.2 also yields the bound $\tilde{\lambda}_{\max} \preccurlyeq h^d$ on the maximal eigenvalue of $\tilde{G}$, implying that the condition number is bounded uniformly in h, i.e., $\operatorname{cond}_2 \tilde{G} = \tilde{\lambda}_{\max}/\tilde{\lambda}_{\min} \preccurlyeq 1$. Hence, the linear two-stage method $\tilde{\mathcal{P}}$ combines optimal error bounds with numerical stability.

5.2. **Discrete least squares on scattered data.** While the desired properties of continuous least squares fits depends on nothing but our assumptions on the shape of Ω and upper bounds on the grid width, the distortion, and the size of local domains, scattered data problems require more care. For instance, as shown in the introduction, problems may occur near the boundary and for unevenly distributed data.

Let $\Xi := \{\xi_\ell\}_\ell$ be a finite set of data sites $\xi_\ell \in \Omega$, and let $f_\ell := f(\xi_\ell)$ be the corresponding values sampled from some function $f \in C^0(\Omega)$. Assuming continuity is necessary to make sure that point evaluation is well defined. A straightforward approach to constructing local operators P_i is to compute a discrete least squares fit of the data (ξ_ℓ, f_ℓ) in $S_{\Omega,i}$ or, more generally, in a local domain $\omega_i \in \mathcal{W}_T^*$ containing the inner grid cell Γ_i'. Clearly, if no further assumptions on the data density and distribution are made, the sets ω_i have to be carefully chosen to ensure that the data sites in $\Xi_{\omega_i} := \Xi \cap \omega_i$ provide sufficient information to compute reasonable local approximations $P_i f$ on Γ_i'.

Assuming that $\Xi_{\omega_i} := \Xi \cap \omega_i$ is a *total set* for ${}^e\mathcal{B}^n_{\omega_i}$, i.e., $s \in {}^e\mathcal{B}^n_{\omega_i}$ and $s_{|\Xi_{\omega_i}} = 0$ implies $s = 0$, the local discrete least squares fit $\bar{P}_i$, can be defined uniquely by

$$\|(f - \bar{P}_i f)_{|\Xi_{\omega_i}}\|_2 = \min_{s \in {}^e\mathcal{B}^n_{\omega_i}} \|(f - s)_{|\Xi_{\omega_i}}\|_2.$$

This defines the operator $\bar{P}_i : C^0(\omega_i) \to L^\infty(\Gamma_i')$ for each $i \in I_\Omega$. Clearly, the corresponding two-stage method $\bar{\mathcal{P}}$ is of type (n, ∞) if the norms $\|\bar{P}_i\|$, $i \in I_\Omega$, of the above operators are uniformly bounded. In general, this will not be the case.

If the scattered data Ξ are too sparse, it may be impossible to find ω_i such that Ξ_{ω_i} is a total set for ${}^e\mathcal{B}^n_{\omega_i}$, and even if Ξ_{ω_i} is a total set, it may happen that the local data sites are ill-distributed such that the norms $\|\bar{P}_i\|$ cannot be bounded. To handle such data with a two-stage method, more complicated adaptive algorithms may be applied. In particular, the methodology of [4, 7] can be adopted, such that $\|\bar{P}_i\|$ is estimated using the minimum singular value of the collocation matrix obtained by evaluating the local EB-splines at the data sites. We leave the development of such algorithms for future research.

However, to begin with, we show the boundedness of $\|\bar{P}_i\|$ under two additional assumptions: sufficient density of the data and boundedness of the number of the data sites in each spline cell. As usual, the density of a subset $X \subset Y \subset \mathbb{R}^d$ is measured by the *fill distance*

$$\mathrm{fd}(X, Y) := \max_{y \in Y} \min_{x \in X} \|x - y\|_2.$$

Since $s|_{\Gamma_i'}$ is a polynomial, by Markov inequality there exists a constant β depending only on n and d (e.g., $\beta = 2(n-1)^2\sqrt{d}$), such that

$$\max_{y \in \Gamma_i'} \|\nabla s(y)\|_2 \le \frac{\beta}{h} \|s\|_{L^\infty(\Gamma_i')}, \quad \text{for all } s \in \mathcal{B}^n_\Omega,\ i \in I_\Omega. \tag{23}$$

Theorem 5.2. *Assume that*

- *the data sites Ξ are sufficiently dense in Γ_i' in the sense that*

$$\mathrm{fd}(\Xi \cap \Gamma_i', \Gamma_i') \le h/(2\beta), \quad i \in I_\Omega, \tag{24}$$

and

- *the maximum number of data sites in each spline cell is bounded by a constant* $\varkappa$,

$$\max_{k\in\mathbb{Z}^d} \#(\Xi\cap\Gamma_k) \le \varkappa. \tag{25}$$

Then $\bar{\mathcal{P}}$ *is a two-stage method of type* (n,∞) *with* $\nu_\infty \preccurlyeq \sqrt{\varkappa}$.

Proof. As soon as the data are sufficiently dense to ensure that Ξ_{ω_i} is a total set for ${}^e\mathcal{B}^n_{\omega_i}$, $\|\bar{P}_i\|$ can be estimated as $\rho_i \le \|\bar{P}_i\| \le \sqrt{\#\Xi_{\omega_i}}\,\rho_i$, where

$$\rho_i := \max\Big\{\|s\|_{L^\infty(\Gamma_i')}\colon s\in {}^e\mathcal{B}^n_{\omega_i},\ \|s_{|\Xi_{\omega_i}}\|_\infty \le 1\Big\};$$

see [4, Proof of Theorem 2.1]. It is easy to see that Ξ_{ω_i} is a total set if and only if $\rho_i<\infty$. Since $|\omega_i|\le rh$, the number of cells Γ_k satisfying $\Xi_{\omega_i}\cap\Gamma_k\ne\emptyset$ is bounded by a constant. Hence, by (25), we have $\#\Xi_{\omega_i}\preccurlyeq\varkappa$, which implies

$$\|\bar{P}_i\| \preccurlyeq \sqrt{\varkappa}\,\rho_i.$$

To find a bound for ρ_i, we apply the techniques introduced in [16]; see also [24, Proof of Theorem 3.8]. For $s\in{}^e\mathcal{B}^n_{\omega_i}$, with $\|s_{|\Xi_{\omega_i}}\|_\infty\le 1$, let $x\in\Gamma_i'$ be a point with the property $|s(x)| = \|s\|_{L^\infty(\Gamma_i')}$. It follows from (24) that there is a data point $\xi\in\Xi\cap\Gamma_i'\subset\Xi_{\omega_i}$ such that $\|x-\xi\|_2\le h/(2\beta)$. Hence, using (23) we obtain

$$|s(x)-s(\xi)| \le \max_{y\in[x,\xi]}\|\nabla s(y)\|_2\|x-\xi\|_2 \le \frac{1}{2}\|s\|_{L^\infty(\Gamma_i')}.$$

Thus,

$$1\ge|s(\xi)|\ge|s(x)|-|s(x)-s(\xi)|\ge\|s\|_{L^\infty(\Gamma_i')}-\frac{1}{2}\|s\|_{L^\infty(\Gamma_i')}=\frac{1}{2}\|s\|_{L^\infty(\Gamma_i')},$$

and so $\|s\|_{L^\infty(\Gamma_i')}\le 2$, which shows that $\rho_i\le 2$. □

It is easy to see that conditions (24) and (25) are compatible. For example, (24) is satisfied if Ξ is a uniform grid with side length $h/(\beta\sqrt{d})$. In this case (25) holds true with $\varkappa=(\beta\sqrt{d})^d$. Note that the numerical values for $\varkappa$ resulting from these estimates, e.g., 1296 for the above grid in case $d=2$, $n=4$, have little practical importance as they are very pessimistic. Indeed, our numerical results below show that the method described in this section (with $d=2$, $n=4$, $r=14$) performs very well for random data with just four data points per cell on average.

Condition (25) may seem counterintuitive because it suggests that in some circumstances the availability of additional data may be harmful. In fact, a close inspection of the error bounds for *global* discrete least squares from spline spaces with stable bases given in [10, 11] reveals that they also depend on the maximum number $\varkappa$ of data sites in the spline cells. A similar phenomenon has been discussed in [19] for the moving least squares approximations. The following example shows that this is a genuine phenomenon and in general, the approximation error, and hence the norm of the discrete least squares operator, can indeed become arbitrarily large as the number of data sites is growing.

Example 5.3. Consider the bivariate grid with cells $(-\frac{h}{2},\frac{h}{2})^2+h\mathbb{Z}^2$. Then $\Gamma=(-\frac{h}{2},\frac{h}{2})^2\subset\omega\subset\mathbb{R}^2$ is a grid cell for the space $\mathcal{B}^2_\omega$ and $f(x,y):=1-x^2-y^2$. Choose a constant $k\ge 2$ and consider the set of data sites $\Xi=\Xi_1\cup\Xi_2$, where $\Xi_1:=\frac{h}{4}\mathbb{Z}^2\cap\omega$, and Ξ_2 is a finite subset of the circle segment

$$\sigma:=\big\{(x,y)\in[-\tfrac{h}{2},\tfrac{h}{2}]^2 : f(x,y)=s(x,y):=khx+1-h^2/4\big\}$$

(see Figure 2(a)), defined as follows. Set $r := \|f_{|\Xi_1} - s_{|\Xi_1}\|_2$, and choose a positive integer N such that $\delta := r/\sqrt{N} < h^2/72$. Then $\Xi_2 := \{\xi_i = (x_i, y_i) : i = -3N, \ldots, 3N\}$, where $y_i = \frac{ih}{6N}$ and x_i is uniquely determined from the condition $\xi_i \in \sigma$. Let $s^* \in \mathcal{B}^2_\omega$ be the discrete least squares approximation to f with respect to the data sites in Ξ. We claim that

$$\|f - s^*\|_{L^\infty(\Gamma)} > \frac{kh^2}{24}. \tag{26}$$

As k can be chosen arbitrarily large, the approximation error is not $\mathcal{O}(h^2)$.

Proof of (26). In view of $s_{|\sigma} = f_{|\sigma}$, we have $\|f_{|\Xi} - s_{|\Xi}\|_2 = r$. Since s belongs to B^2_ω, this implies $\|f_{|\Xi} - s^*_{|\Xi}\|_2 \le r$. It follows that there exists i_1 with $2N \le i_1 \le 3N$, such that $|f(\xi_{i_1}) - s^*(\xi_{i_1})| < \delta$ and $|f(\xi_{-i_1}) - s^*(\xi_{-i_1})| < \delta$. By a simple calculation we have $|f(\xi_{i_1})| = |f(\xi_{-i_1})| \le f(\xi_{2N}) < 1 - h^2/9$. Hence $\max\{s^*(\xi_{i_1}), s^*(\xi_{-i_1})\} \le 1 - h^2/9 + \delta \le 1 - 7h^2/72$. Since $s^*_{|\Gamma}$ is linear along the line $x = x_{i_1} = x_{-i_1}$, it follows that $s^*(x_{i_1}, 0) \le 1 - 7h^2/72$. Similarly, there exists i_2 with $0 \le i_2 \le N$, such that $|f(\xi_{i_2}) - s^*(\xi_{i_2})| < \delta$ and $|f(\xi_{-i_2}) - s^*(\xi_{-i_2})| < \delta$, and as in the above it is easy to see that $s^*(x_{i_2}, 0) \ge \min\{s^*(\xi_{i_2}), s^*(\xi_{-i_2})\} > 1 - h^2/16$. Since $s^*_{|\Gamma}$ is linear along the line $y = 0$, and $|x_{i_1} - x_{i_2}| \le h/(4k)$, we conclude that the slope of this linear function is at least $kh/12$. Therefore, $s^*(\frac{h}{2}, 0) - s^*(x_{i_2}, 0) \ge (2k-1)h^2/48$, and we deduce that $s^*(\frac{h}{2}, 0) - f(\frac{h}{2}, 0) = [s^*(\frac{h}{2}, 0) - s^*(x_{i_2}, 0)] + s^*(x_{i_2}, 0) - f(\frac{h}{2}, 0) \ge (2k-1)h^2/48 + (1 - h^2/16) - (1 - h^2/4) > kh^2/24$, and (26) follows. □

The bad errors are clearly caused by the fact that too many data sites are lying on the intersection curve of f with its poor approximation $s \in \mathcal{B}^2_\omega$. Clearly, (26) remains valid if $\mathcal{B}^2_\omega$ is replaced by ${}^e\mathcal{B}^n_\omega$. Note that the density assumption (24) is satisfied in the above example as $\mathrm{fd}(\Xi \cap \Gamma) = h/(2\beta)$, with $\beta = 2\sqrt{2}$ in (23) for $n = 2$. Moreover, it is not difficult to see that $k \succcurlyeq \sqrt{\varkappa}$ if ω is a local domain, which shows that the estimate $\nu_\infty \preccurlyeq \sqrt{\varkappa}$ in Theorem 5.2 cannot be improved. The example also applies to the global least squares ($\omega = \Omega$), in which case, however, $\varkappa \succcurlyeq k^2/h^4$. The estimate $\|f - s^*\|_{L^\infty(\Gamma)} \succcurlyeq \sqrt{\varkappa} h^2$ is obtained for the global least squares if the example is modified as follows: Replace f by the expansion of $f_{|\Gamma}$ as a linear combination of 9 biquadratic B-splines whose supports contain Γ, and, similarly, replace s by the spline in $\mathcal{B}^2_\Omega$ that interpolates s at the corners of Γ and vanishes at all other knots.

Precaution needs to be taken to avoid the effects demonstrated by this example. A simple remedy is to perform *data thinning* by removing "extraneous" data points while maintaining their sufficient density to guarantee the same approximation order of the method $\bar{\mathcal{P}}$. For example, assume for simplicity that Ω is a d-dimensional cube and replace (24) by a stronger bound on the fill distance, $\mathrm{fd}(\Xi \cap \Gamma'_i, \Gamma'_i) < h/(2\beta\sqrt{d})$, $i \in I_\Omega$. If we now choose in Ω a uniform d-dimensional grid with side length $\varepsilon \le h/(2\beta\sqrt{d})$, then every cell of this grid will contain at least one data point. By selecting a single point in each cell, and discarding all points of Ξ that have not been selected for any cell, we arrive at the thinned data Ξ' satisfying (24). Moreover, the number of points of Ξ' lying in a single spline cell Γ_k is bounded by $(h/\varepsilon)^d$, which shows that (25) is satisfied for Ξ' with $\varkappa$ close to $(2\beta\sqrt{d})^d$. Alternatively, thinning may be performed in the local approximation stage (i.e., effectively built into the local operators $\bar{P}_i$) as described, e.g., in [7].

If certain subregions of Ω are populated by significantly denser data, and higher approximation quality is required there, then *hierarchical spline techniques* [9] are more appropriate than data thinning. However, an analysis of hierarchical spline methods is beyond the scope of this paper.

5.3. **Weighted discrete least squares.** In this section, we develop an alternative framework based on a suitably weighted discrete least squares fit. It leads to a two-stage method $\hat{\mathcal{P}}$ of type (n,p) for any $p > d/n$ with uniform bound $\nu_p \preccurlyeq 1$, independent of the number or distribution of data sites provided that the data are sufficiently dense. Since $p > d/n$, Sobolev embedding theorem guarantees that every $f \in W_p^n(\Omega)$ can be changed on a set of measure zero to become a continuous function. Therefore the point evaluation is well defined for any $f \in W_p^n(\Omega)$.

We first group data as follows: Given an integer $\mu \geq 2$, we define the sequences U^ι by piecewise uniform refinement of the knot sequences T^ι,

$$u^\iota_{\mu\ell+m} := t^\iota_\ell + l^\iota_\ell \frac{m}{\mu}, \quad \ell \in \mathbb{Z},\ m = 0,\dots,\mu-1,\ \iota = 1,\dots,d.$$

The corresponding *subcells* are denoted by

$$\gamma_k := [u^1_{k^1}, u^1_{k^1+1}) \times \cdots \times [u^d_{k^d}, u^d_{k^d+1}), \quad k \in \mathbb{Z}^d.$$

In this way, always μ^d subcells of equal size form a disjoint union of the grid cells. For all $k \in \mathbb{Z}^d$, the side lengths of γ_k are bounded from above by $h_\mu := h/\mu$, and from below by h_μ/ϱ.

To compute a local approximation $\hat{P}_i f$, we select a subset $\Xi_i \subset \Xi$ of data sites such that

$$|\Xi_i| \leq (r - 2/\mu)h \quad \text{and} \quad \Gamma_i' \subset \hat{\omega}_i := \bigcup_{\xi\in\Xi_i} \gamma_\xi, \tag{27}$$

where γ_ξ denotes the subcell containing the point ξ. This is possible if the data are sufficiently dense in the sense that every subcell in the inner grid cell Γ_i' contains at least one data site. This is guaranteed, for example, when $\mathrm{fd}(\Xi \cap \Gamma_i', \Gamma_i') < h_\mu/\varrho$. We remark that $\hat{\omega}_i$ is *not* required to be a subset of Ω. However, $\omega_i := \hat{\omega}_i \cap \Omega$ is a local domain since $|\omega_i| \leq |\hat{\omega}_i| \leq |\Xi_i| + 2h_\mu \leq hr$.

Suitable local approximation schemes can be obtained by solving weighted discrete least squares problems. For a fixed $i \in I_\Omega$, we define the weight $d(\xi)$ as the quotient of the volume of γ_ξ and the number of data sites in γ_ξ,

$$d(\xi) := \frac{\mathrm{vol}(\gamma_\xi)}{\#\{\Xi_i \cap \gamma_\xi\}}.$$

Abbreviating $\omega := \omega_i$ and $\hat{\omega} := \hat{\omega}_i$, we define the operator

$$\hat{P}_i : C^0(\omega) \ni f \mapsto \hat{a}_{\hat{\omega}} B_{\hat{\omega}} \in {}^e\mathcal{B}^n_{\hat{\omega}}$$

via the *normal equation* $\hat{G}\hat{a}_{\hat{\omega}} = \hat{F}$, where

$$\hat{G}_{j,k} := \sum_{\xi\in\Xi_i} B_{\hat{\omega},j}(\xi) B_{\hat{\omega},k}(\xi) d(\xi), \quad \hat{F}_j := \sum_{\xi\in\Xi_i} B_{\hat{\omega},j}(\xi) f(\xi) d(\xi), \quad j,k \in I_{\hat{\omega}}.$$

That is, the spline $\hat{a}_{\hat{\omega}} B_{\hat{\omega}}$ is minimizing the weighted error

$$\sum_{\xi\in\Xi_i} \left(\hat{a}_{\hat{\omega}} B_{\hat{\omega}}(\xi) - f(\xi)\right)^2 d(\xi) \to \min$$

at the data sites in Ξ_i. Of course, in applications, $\hat{a}_{\hat{\omega}}$ can be determined numerically by more suitable methods, such as QR-factorisation, rather than resorting to the normal equation.

The case $p = \infty$ is considered first.

Theorem 5.4. *For sufficiently large μ, let condition* (27) *be satisfied for all $i \in I_\Omega$. Then the local operators $\hat{P}_i$, $i \in I_\Omega$, are well defined, and the corresponding two-stage method $\hat{\mathcal{P}}$ is of type (n, ∞) with $\nu_\infty \preccurlyeq 1$.*

Proof. Clearly, $\hat{\mathcal{P}}$ reproduces polynomials of order n as soon as the matrix $\hat{G}$ is nonsingular, which will be shown below under the assumption that μ is sufficiently large. Since $\hat{P}_i$ is linear, it suffices to show that

$$\|\hat{P}_i f\|_{L^\infty(\Gamma_i')} \preccurlyeq \|f\|_{L^\infty(\omega)}, \quad f \in C^0(\omega),$$

for all $i \in I_\Omega$, where we drop the index i of ω_i, again.

Let $\tilde{G}$ be the Gramian matrix of continuous least squares, as defined in (21), for the set $\hat{\omega}$. We have $\Gamma_i' \subset \hat{\omega}$ and $|\hat{\omega}| \le rh$. Hence, following the arguments used in the proof of Theorem 5.1, we conclude that the smallest eigenvalue of $\tilde{G}$ is bounded from below by $\tilde{\lambda}_{\min} \succcurlyeq h^d$.

Next, we show that $\hat{G}$, as a small perturbation of $\tilde{G}$, inherits this property of the smallest eigenvalue. For a suitable set $L \subset \mathbb{Z}^d$ of indices, the local domain $\hat{\omega}$ can be written as the disjoint union $\hat{\omega} = \bigcup_{\ell \in L} \gamma_\ell$ of subcells. Abbreviating $b := B_{\hat{\omega},i} B_{\hat{\omega},k}$ and $\Xi_{i,\ell} := \Xi_i \cap \gamma_\ell$, we have

$$\tilde{G}_{i,k} - \hat{G}_{i,k} = \sum_{\ell \in L} \Big(\int_{\gamma_\ell} b - \sum_{\xi \in \Xi_{i,\ell}} b(\xi) d(\xi) \Big).$$

For a fixed ℓ, all points in the inner sum have the same weight $d(\xi) = \mathrm{vol}(\gamma_\xi)/\#\{\Xi_i \cap \gamma_\xi\}$. Since b is continuous on the connected set γ_ℓ, the intermediate value theorem implies existence of a point $\eta_\ell \in \gamma_\ell$ with

$$b(\eta_\ell) = \frac{1}{\#\{\Xi_i \cap \gamma_\xi\}} \sum_{\xi \in \Xi_{i,\ell}} b(\xi).$$

Hence, by the mean value theorem,

$$\Big| \int_{\gamma_\ell} b - \sum_{\xi \in \Xi_{i,\ell}} b(\xi) d(\xi) \Big| = \Big| \int_{\gamma_\ell} \big(b - b(\eta_\ell) \big) \Big| \le h_\mu |b|_{W^1_\infty(\gamma_\ell)} \int_{\gamma_\ell} 1.$$

By (7), the gradient of b is bounded by $|b|_{W^1_\infty(\gamma_\ell)} \preccurlyeq h^{-1}$ so that

$$|\tilde{G}_{i,k} - \hat{G}_{i,k}| \preccurlyeq \frac{h_\mu}{h} \sum_{\ell \in L} \int_{\gamma_\ell} 1 = \frac{\mathrm{vol}(\hat{\omega})}{\mu} \preccurlyeq \frac{h^d}{\mu}.$$

$\# I_{\hat{\omega}}$ is bounded by a constant, implying that $\|\tilde{G} - \hat{G}\|_2 \preccurlyeq h^d/\mu$. Since $\tilde{G}, \hat{G}$ are symmetric, the smallest eigenvalue $\hat{\lambda}_{\min}$ of $\hat{G}$ satisfies

$$|\hat{\lambda}_{\min} - \tilde{\lambda}_{\min}| \le \|\tilde{G} - \hat{G}\|_2 \preccurlyeq h^d/\mu,$$

which together with $\tilde{\lambda}_{\min} \succcurlyeq h^d$ implies

$$\hat{\lambda}_{\min} \ge \tilde{\lambda}_{\min}/2 \succcurlyeq h^d,$$

provided that μ is large enough.

In particular, $\hat{G}$ is invertible, saying that $\hat{P}_i$ is well defined. Further, $\|\hat{G}^{-1}\|_\infty \preccurlyeq h^{-d}$ follows as in the proof of Theorem 5.1. The components of $\hat{F}$ are bounded by

$$|\hat{F}_j| \le \sum_{\ell\in L}\sum_{\xi\in\Xi_{i,\ell}} |B_j(\xi)|\,|f(\xi)|d(\xi) \preccurlyeq \|f\|_{L^\infty(\omega)} \sum_{\ell\in L} \mathrm{vol}(\gamma_\ell) \le h^d \|f\|_{L^\infty(\omega)}.$$

Hence, $\|\hat{a}_{\hat{\omega}}\|_\infty \le \|\hat{G}^{-1}\|_\infty \|\hat{F}\|_\infty \preccurlyeq \|f\|_{L^\infty(\omega)}$, and by (6),

$$\|\hat{P}_i f\|_{L^\infty(\Gamma_i')} \le \|\hat{a}_{\hat{\omega}} B_{\hat{\omega}}\|_{L^\infty(\hat{\omega})} \preccurlyeq \|\hat{a}_{\hat{\omega}}\|_\infty \preccurlyeq \|f\|_{L^\infty(\omega)},$$

as requested. □

Results for the case $d/n < p < \infty$ can be derived if the sets Ξ_i of data sites used for the local approximation are chosen such that $|\Xi_i| \le (r - 2/\mu)h$, as before, but now

$$\Gamma_i' \subset \omega_i := \bigcup_{\xi\in\Xi_i} \gamma_\xi \subset \Omega. \tag{28}$$

That is, data sites whose neighborhood γ_ξ is not contained in the domain Ω are discarded.

Theorem 5.5. *Let $p > d/n$. For sufficiently large μ, let condition* (28) *be satisfied for all $i \in I_\Omega$. Then the local operators $\hat{P}_i$, $i \in I_\Omega$, are well defined, and the corresponding two-stage method $\hat{\mathcal{P}}$ is of type (n,p) with $\nu_p \preccurlyeq 1$.*

Proof. The properties of $\hat{G}$ derived in the preceding proof are valid also here. In particular, by the equivalence of norms, $\|\hat{G}^{-1}\|_p \preccurlyeq h^{-d}$ for μ sufficiently large. The components of $\hat{F}$ are bounded by

$$|\hat{F}_j| \le \sum_{\ell\in L}\sum_{\xi\in\Xi_{i,\ell}} |B_j(\xi)|\,|f(\xi)|d(\xi) \preccurlyeq \sum_{\ell\in L} \mathrm{vol}(\gamma_\ell)\|f\|_{L^\infty(\gamma_\ell)} \le h_\mu^d \sum_{\ell\in L} \|f\|_{L^\infty(\gamma_\ell)}.$$

The side lengths of the subcells γ_ℓ lie between h_μ/ϱ and h_μ. Hence, transferring the Sobolev inequality

$$\|f\|_{L^\infty(u)} \preccurlyeq \|f\|_{L^p(u)} + |f|_{W_p^n(u)}, \quad u := [0,1]^d,$$

from the unit cube u to γ_ℓ by scaling, we see that

$$\|f\|_{L^\infty(\gamma_\ell)} \preccurlyeq h_\mu^{-d/p}\big(\|f\|_{L^p(\gamma_\ell)} + h_\mu^n |f|_{W_p^n(\gamma_\ell)}\big).$$

The number $\#L$ of subcells γ_ℓ forming ω is bounded by $\#L \preccurlyeq \mu^d$. Hence, by Hölder's inequality, the 1-norm and the p-norm in $\mathbb{R}^{\#L}$ are related by $\|\cdot\|_1 \preccurlyeq \mu^{d/p'}\|\cdot\|_p$, and we conclude

$$\begin{aligned}|\hat{F}_j| &\preccurlyeq h_\mu^{d/p'} \mu^{d/p'} \left(\Big(\sum_{\ell\in L} \|f\|_{L^p(\gamma_\ell)}^p\Big)^{1/p} + h_\mu^n \Big(\sum_{\ell\in L} |f|_{W_p^n(\gamma_\ell)}^p\Big)^{1/p} \right) \\ &\le h^{d/p'} \big(\|f\|_{L^p(\omega)} + h^n |f|_{W_p^n(\omega)}\big).\end{aligned}$$

Hence, $\|\hat{a}_\omega\|_p \le \|\hat{G}^{-1}\|_p \|\hat{F}\|_p \preccurlyeq h^{-d/p}\big(\|f\|_{L^p(\omega)} + h^n|f|_{W_p^n(\omega)}\big)$. Finally, by (6),

$$\|\hat{P}_i f\|_{L^p(\Gamma_i')} \le \|\hat{a}_\omega B_\omega\|_{L^p(\omega)} \preccurlyeq \|f\|_{L^p(\omega)} + h^n |f|_{W_p^n(\omega)},$$

and the proof is complete. □

Note that the inequality $\|\hat{P}_i f\|_{L^p(\Gamma_i')} \preccurlyeq \|f\|_{L^p(\omega)}$ does not hold in general, and so we genuinely need here the second part of Definition 4.5 rather than the stronger condition (18) used in Theorems 5.1, 5.2 and 5.4.

6. Numerical results

The focus of this work is on analytical issues, but we want to complement our results by a brief numerical study of a scattered data problem. It is neither comprehensive nor inspired by a real application, but just intended to support our theoretical findings and, in particular, to illustrate the superior performance of extended B-splines over the standard form.

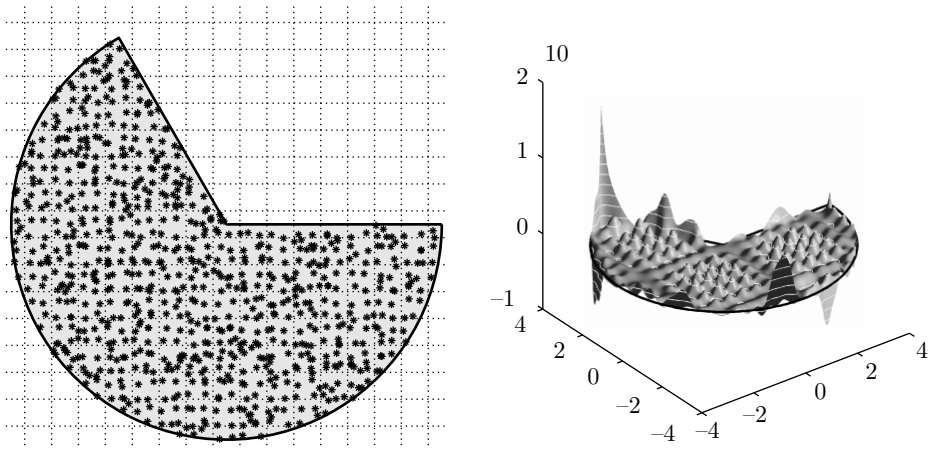

(a) Domain, grid, and data sites for $h = .5$ (b) Error for two-stage approximation

Figure 3. Model problem for scattered data approximation

The domain Ω is a sector with angle $4\pi/3$ and radius 4, centered at the origin, see Figure 3(a). Knot grids $T = [T^1, T^2]$ are equidistant with $T^1 = T^2 = h(\mathbb{Z}+1/2)$ and h ranging between 1 and 1/64. Given h, the data sites Ξ are obtained as follows: First, a randomized set of points is chosen such that, on average, every grid cell contains four points. Second, so far empty subcells are filled with additional random points to make sure that every subcell contains at least one data point. The data values are sampled from the function $f(x, y) = \sin x \cdot \sin y$. We compare three variants on bicubic spline approximation, i.e., $n = 4$:

- *Standard:* A global discrete least squares fit is computed for standard tensor product B-splines.
- *Extended:* A global discrete least squares fit is computed for extended tensor product B-splines.
- *Two-stage:* A two-stage approximation is computed based on a local weighted discrete least squares fit with extended tensor product B-splines. The parameter μ, as introduced in Section 5.3, is set to $\mu = 2$, and the local domains ω_i according to Definition 4.1 are

$$\omega_i := \Omega \cap [t^1_{i^1-6}, t^1_{i^1+8}] \times \cdots \times [t^d_{i^d-6}, t^d_{i^d+8}], \quad i \in I_\Omega.$$

Figure 3(b) shows the error of the two-stage approximation with bicubic EB-splines. Thanks to the stability of the basis, the errors in the interior and near the boundary are of comparable size.

Figure 4 and Table 1 present numerical results, where the maximum, respectively, mean errors are estimated by evaluation on a fine 800×800 grid. The partially large errors of standard B-spline approximation indicate the corruptive effect of straying coefficients of outer B-splines. By contrast, both local and global approximation with extended B-splines show the predicted behavior with the optimal order $O(h^4)$ of convergence. We note that the results of local and global approximation are so close that they can be hardly distinguished in the plot.

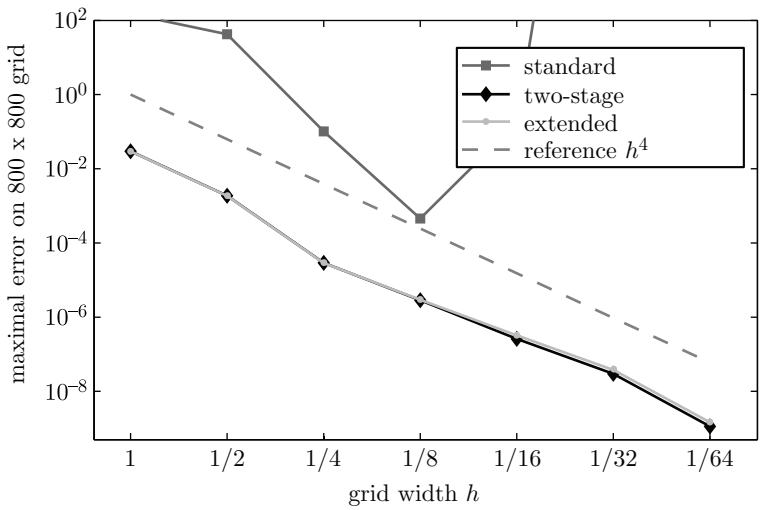

FIGURE 4. Maximum error of different approximation schemes

TABLE 1. Mean error and experimental rate of convergence (ERC) of different approximation schemes

	Mean error				
h	standard	extended	ERC	two-stage	ERC
1	9.01E-002	9.56E-004		9.66E-004	
1/2	8.13E-003	3.95E-005	24.2	3.95E-005	24.5
1/4	5.22E-006	1.81E-006	21.8	1.83E-006	21.6
1/8	1.16E-007	1.07E-007	16.9	1.08E-007	16.9
1/16	7.16E-007	6.47E-009	16.5	6.49E-009	16.6
1/32	7.28E+009	4.00E-010	16.2	4.01E-010	16.2
1/64	3.62E+011	2.46E-011	16.3	2.50E-011	16.0

REFERENCES

[1] Robert A. Adams and John J. F. Fournier. *Sobolev Spaces, 2nd Edition.* Academic Press, 2003. MR2424078 (2009e:46025)

[2] Carl de Boor. *A Practical Guide to Splines.* Springer, 1978. MR507062 (80a:65027)

[3] Susanne C. Brenner and L. Ridgway Scott. *The Mathematical Theory of Finite Element Methods.* Springer, New York, 2nd edition, 2002. MR1894376 (2003a:65103)

[4] Oleg Davydov. On the approximation power of local least squares polynomials. In I. J. Anderson J. Levesley and J. C. Mason, editors, *Algorithms for Approximation IV*, pages 346–353. University of Huddersfield, UK, 2002.

[5] Oleg Davydov, Rossana Morandi, and Alessandra Sestini. Local hybrid approximation for scattered data fitting with bivariate splines. *Computer Aided Geometric Design*, 23(9):703–721, 2006. MR2278767 (2008d:65008)

[6] Oleg Davydov, Alessandra Sestini, and Rossana Morandi. Local RBF approximation for scattered data fitting with bivariate splines. In Detlef Mache, Jźsef Szabados, and Marcel Bruin, editors, *Trends and Applications in Constructive Approximation*, volume 151 of *International Series of Numerical Mathematics*, pages 91–102. Birkäuser Basel, 2005. MR2147572 (2006b:65016)

[7] Oleg Davydov and Frank Zeilfelder. Scattered data fitting by direct extension of local polynomials to bivariate splines. *Adv. Comput. Math.*, 21(3-4):223–271, 2004. MR2073142 (2005m:65020)

[8] Paul Dierckx. *Curve and surface fitting with splines*. Oxford University Press, Inc., New York, NY, USA, 1993. MR1218172 (94m:65028)

[9] David R. Forsey and Richard H. Bartels. Hierarchical B-spline refinement. In *SIGGRAPH '88: Proceedings of the 15th annual conference on Computer graphics and interactive techniques*, pages 205–212, New York, NY, USA, 1988. ACM.

[10] Manfred von Golitschek. Norms of projectors onto spaces with Riesz bases. *J. Comput. Appl. Math.*, 119(1-2):209–221, 2000. MR1774218 (2001g:41012)

[11] Manfred von Golitschek and Larry L. Schumaker. Bounds on projections onto bivariate polynomial spline spaces with stable local basis. *Constr. Approx.*, 18:241–254, 2002. MR1890498 (2003f:41013)

[12] Jörg Haber, Frank Zeilfelder, Oleg Davydov, and Hans Peter Seidel. Smooth approximation and rendering of large scattered data sets. In *Proceedings of the conference on Visualization '01*, VIS '01, pages 341–348, Washington, DC, USA, 2001. IEEE Computer Society.

[13] Klaus Höllig. *Finite Element Methods with B-Splines*. Society for Industrial and Applied Mathematics, Philadelphia, PA, USA, 2003. MR1952348 (2003j:65001)

[14] Klaus Höllig and Ulrich Reif. Nonuniform web-splines. *Comput. Aided Geom. Des.*, 20(5):277–294, 2003. MR1988652 (2004d:65020)

[15] Klaus Höllig, Ulrich Reif, and Joachim Wipper. Weighted extended B-spline approximation of Dirichlet problems. *SIAM J. Numer. Anal.*, 39(2):442–462, 2001. MR1860269 (2002g:65141)

[16] Kurt Jetter, Joachim Stöckler, and John D. Ward. Error estimates for scattered data interpolation on spheres. *Math. Comp.*, 68:733–747, 1999. MR1642746 (99i:41032)

[17] Ming-Jun Lai and Larry L. Schumaker. A domain decomposition method for computing bivariate spline fits of scattered data. *SIAM J. Numer. Anal.*, 47(2):911–928, 2009. MR2485438 (2010e:65013)

[18] Byung-Gook Lee, Tom Lyche, and Knut Mørken. Some examples of quasi-interpolants constructed from local spline projectors. pages 243–252, Nashville, TN, USA, 2001. Vanderbilt University. MR1858961

[19] Yaron Lipman. Stable moving least-squares. *J. Approx. Theory*, 161(1):371–384, 2009. MR2558161 (2010i:65027)

[20] Tom Lyche, Carla Manni, and Paul Sablonnière. Quasi-interpolation projectors for box splines. *J. Comput. Appl. Math.*, 221(2):416–429, 2008. MR2457674 (2009h:65016)

[21] Bernhard Mößner and Ulrich Reif. Stability of tensor product B-splines on domains, 2008. MR2460580 (2010b:41008)

[22] Ulrich Reif. Polynomial approximation on domains bounded by diffeomorphic images of graphs. *Journal of Approximation Theory*, 2012. to appear.

[23] Larry Schumaker. Two-stage spline methods for fitting surfaces. In Robert Schaback and Karl Scherer, editors, *Approximation Theory*, volume 556 of *Lecture Notes in Mathematics*, pages 378–389. Springer Berlin / Heidelberg, 1976. MR0617766 (58:29712)

[24] Holger Wendland. *Scattered Data Approximation*. Cambridge University Press, 2005. MR2131724 (2006i:41002)

Department of Mathematics, University of Strathcylde, 26 Richmond Street, Glasgow, G1 1XH United Kingdom
E-mail address: oleg.davydov@strath.ac.uk

Fachbereich Mathematik, Technische Universität Darmstadt, Schlossgartenstr. 7, 64289 Darmstadt, Germany
E-mail address: praiswa@mathematik.tu-darmstadt.de

Fachbereich Mathematik, Technische Universität Darmstadt, Schlossgartenstr. 7, 64289 Darmstadt, Germany
E-mail address: reif@mathematik.tu-darmstadt.de