UNCOUNTABLY MANY DIFFERENT INVOLUTIONS OF S^3

W. R. ALFORD[1]

1. **Introduction.** In 1952 R. H. Bing [3] constructed an involution, a homeomorphism of period two, of the three sphere that is not equivalent to any differentiable homeomorphism. Two homeomorphisms are *equivalent* if they are conjugate in the group of homeomorphisms. In his example, the involution is a "reflection" of S^3 through a wild two sphere. Deane Montgomery and Leo Zippin [8] modified Bing's example to get an involution of S^3 that is a "rotation" about a wild simple closed curve.

We will construct a family of inequivalent involutions, "rotations" about wild one spheres, with cardinality of the continuum. The proof depends on the not easily proved statement that their fixed point sets are inequivalently embedded. One might try to find a family of such homeomorphisms by constructing them with nonhomeomorphic fixed point sets; however, this cannot be done as shown by a theorem of P. A. Smith [9], which says that the fixed point set of an involution of S^3 must be a sphere of lower dimension.

Two homeomorphic closed sets X and Y in S^3 are *equivalently embedded* if there is a homeomorphism h of S^3 onto itself such that $h(X)=Y$. If X is homeomorphic to a polyhedron, then X is *tame* if there is a homeomorphism h of S^3 such that $h(S^3)=S^3$ and $h(X)$ is a subcomplex of some triangulation of S^3. Otherwise X is *wild*.

Some liberty is taken with the notation. For instance, we make no distinction between E^3 and S^3. The notation Bd, Int, Ext, is standard. Bd is used in two senses, the topological boundary and the combinatorial boundary. Int is used in three senses, the topological interior, the combinatorial interior, and the bounded complementary domain of a compact two manifold. Ext is used to denote the unbounded complementary domain of a compact two manifold.

I wish to thank Professors G. S. Young, Deane Montgomery, and Ta-Sun Wu for their suggestions and criticisms. The problem originated with Professor Montgomery and it was discussed at length with each of the aforementioned.

Presented to the Society, April 12, 1962; received by the editors August 14, 1964.

[1] A portion of the author's dissertation written under Professor G. S. Young at Tulane University.

2. **Two examples of involutions.** The first example is Montgomery and Zippin's [**8**] modification of Bing's example [**3**]. The second is a Montgomery and Zippin [**8**] type modification of Wu's [**10**] modification of Bing's example [**3**].

We will show in Theorem 7 that f and f' are inequivalent since their fixed point sets (the set of x such that $f(x)=x$) are inequivalently embedded.

LEMMA. *If g and g' are equivalent homeomorphisms of E^3, then the fixed point sets of g and g' are equivalently embedded.*

We have a homeomorphism h of E^3 such that $hgh^{-1}=g'$. h^{-1} is then a homeomorphism that takes the fixed point set of g' onto that of g.

EXAMPLE 0 [**8**]. Let P be the plane $x_1=0$ and L be the line $x_1=x_2=0$. We will describe a family of solid tori $T_{i_1\cdots i_n}$, $n=1, 2, \cdots, i_j$

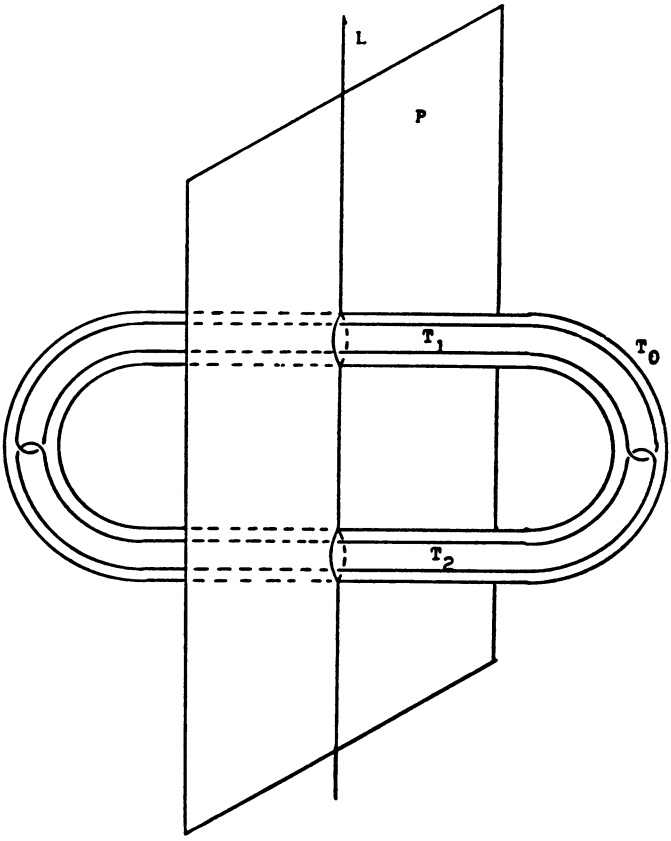

FIGURE 1

$=1, 2$, invariant under the rotation $R=(-x_1, -x_2, x_3)$ such that $\prod_n(\sum T_{i_1\cdots i_n})$ is a Cantor set of tame arcs, i.e., $\prod_n(\sum T_{i_1\cdots i_n})$ is a Cantor set cross an interval and each interval in this set is tame.

Assuming that this has been done, let G be the decomposition of E^3 that consists of components of $\prod_n(\sum T_{i_1\cdots i_n})$ and points not on this set. Since no confusion will arise, we will let G be the natural map of E^3 onto E^3/G. We will show that E^3/G is again E^3 and that $R' = GRG^{-1}$ is an involution of E^3/G and hence of E^3 with fixed point set the wild line $G(L)$.

See Figure 1 for this construction. Let T_0 be a solid torus that is symmetric with respect to L under R, intersects P in two mutually exclusive disks, and intersects L in diameters of these disks. Inside T_0 we will embed two solid tori T_1, T_2 that are symmetric with respect to L under R, each intersects P in two mutually exclusive disks, each intersects L in diameters of these disks, and T_1 and T_2 link. Inside T_1 two tori T_{21}, T_{22} are placed with the same position with respect to

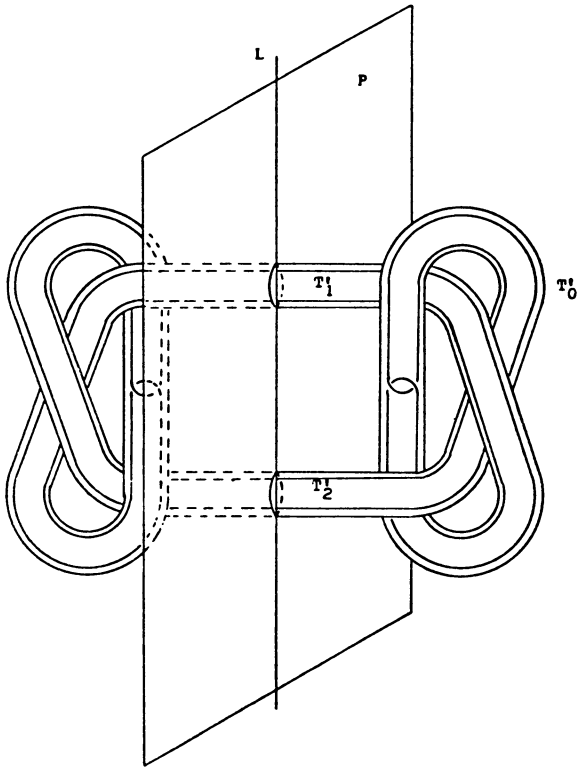

FIGURE 2

T_2 as T_2 and T_1 have with respect to T_0. We continue the process in such a manner that the components of $\prod_n(\sum T_{i_1\cdots i_n})$ intersect planes parallel to P in at most one point. This insures that each component of this set is a tame arc.

THEOREM 1 (BING [3]). *The decomposition space defined above is E^3.*

EXAMPLE 1. This example is the same as Example 0 except that we tie a granny knot in T_0' as shown in Figure 2. Just as T_1 and T_2 are put in T_0, T_1' and T_2' are put in T_0' (no knots in T_1' and T_2' or in the T's at a later stage). Let G_1 be the natural map and we find that $R''=G_1RG_1^{-1}$ is an involution of E^3. A proof that these two involutions are inequivalent is contained in the proof of Theorem 7.

3. **Many examples of involutions.** In this section we will construct, using Examples 0 and 1, a class of involutions with cardinality of the continuum such that no two are equivalent.

The theorems do not appear in logical order. This is to give the reader an insight as to why we need certain key theorems such as Theorems 4, 5, 6, and 7. The natural order would be 6, 7, 4, and 5; however, if they were in this order the reader would, on first reading,

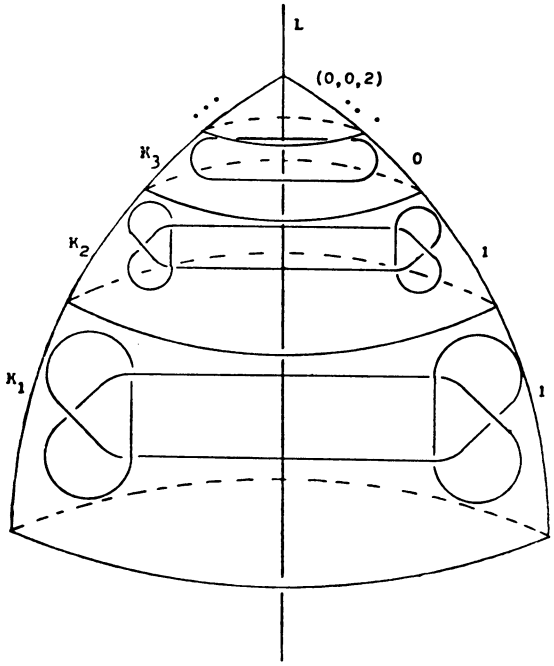

FIGURE 3

have no idea how some of them would be used in the proof of the main theorem.

We begin with the solid of revolution given by

$$4x_1^2 + 4x_2^2 + x_3^2 \leqq 4 \quad \text{and} \quad 0 \leqq x_3.$$

Divide this solid into an infinite number of 3-cells by the family of planes given by $x_3 = 2 - 2^{1-m}$, $m = 0, 1, \cdots$, and the point (0, 0, 2). Denote by K_m the part between $2 - 2^{2-m} \leqq x_3 \leqq 2 - 2^{1-m}$.

Now let $\{C_m\}$ be a sequence of 0's and 1's. The set of all such has cardinality of the continuum. If C_m is i, $i = 0, 1$, then a construction like that in Example 1 is carried out in Int K_m (see Figure 3). Let $G_{\{C_m\}}$ be the natural map of E^3 onto $E^3/G_{\{C_m\}} = {}_TE^3$ and we find that $R_{G_{\{C_m\}}} = G_{\{C_m\}} R G_{\{C_m\}}^{-1}$ is an involution of E^3.

We will show that for two different sequences $\{C_m\}$ and $\{C'_m\}$ that $G_{\{C_m\}}(L)$ and $G_{\{C'_m\}}(L)$ are different embeddings of the line, and hence by the lemma $R_{G_{\{C_m\}}}$ and $R_{G_{\{C'_m\}}}$ are inequivalent involutions of E^3. We state these facts as follows.

THEOREM 2. *There exists a class of lines in E^3 with cardinality of the continuum such that no two are equivalently embedded and each is the fixed point set of an involution.*

First we need some definitions. Let C be a Cantor set in E^3 and p a point of C. *p has genus* 0 with respect to C if for any $\epsilon > 0$ there is a 2-sphere S in E^3 of diameter less than ϵ such that p is contained in the small complementary domain of S and $S \cdot C = 0$. *p has genus $\leqq n$ wrt C* if for any $\epsilon > 0$ there is a 2-manifold without boundary M of genus n in E^3 of diameter less than ϵ such that p is contained in the small complementary domain of M and $M \cdot C = 0$. *p has genus n wrt C* if it has genus $\leqq n$ wrt C but does not have genus $\leqq n-1$ wrt C. If p does not have finite genus wrt C then *p has infinite genus wrt C*. The genus of p wrt C is a local embedding invariant of C at p.

Let H be the nondegenerate elements of any of the decomposition spaces defined above, then $\overline{H} = H + (0, 0, 2)$ is a Cantor set in this space and the image of (0, 0, 2) has genus 0 with respect to this Cantor set. The images of the nondegenerate elements have genus $\leqq 1$; in fact, we will show something much stronger.

THEOREM 3. *If K is the set of nondegenerate elements of $E^3/G_{\{C_m\}}$ contained in some K_m and if $K = A + B$ with A and B nonempty, closed and disjoint, then there is no 2-sphere in E^3 that separates A from B.*

We will show by way of contradiction that no 2-sphere separates

the nondegenerate elements in T_1 from those in T_2 in Example 0 (the proof is almost the same for Example 1 and hence is not included). After this has been shown, it is easy to see that the theorem is true, since any representation of K as two nonempty, disjoint, closed sets must have the property that the nondegenerate elements of some $T_{i\ldots k1}$ are in say A and those in $T_{i\ldots k2}$ are in B. But $T_{i\ldots k1}$ and $T_{i\ldots k2}$ are embedded in E^3 exactly the same as T_1 and T_2.

If S is a 2-sphere that separates T_1 from T_2, then there is a polyhedral one that does [**4**]; hence, we assume that S is polyhedral. Since T_1 cannot be shrunk to a point in the complement of T_2, we find that if S contains T_1 in its interior, then S must contain T_2 in its interior or else intersect T_2. We would like to find out how S and T_2 intersect so that we may be able to show that S must also intersect T_{21} or T_{22}. If we could then show that S must intersect a decreasing sequence of the $T_{2\ldots m}$'s then S would intersect the intersection of this sequence and hence no 2-sphere would separate T_1 and the components of K in T_2. It is toward this end that the following discussion is directed.

We say that a collection of points in E^3 is *in general position* if no three lie on a straight line and no four lie on a plane. If Q is a countable set of points in E^3 then there is a homeomorphism h that moves no point by more than any preassigned positive number ϵ and takes Q onto a collection of points in general position. This can be done by ordering Q and shifting members of Q one at a time by a very small amount. We say that a polyhedron is *in general position* if its 0-skeleton is in general position.

THEOREM 4. *If M_1 and M_2 are two compact polyhedral 2-manifolds without boundary in E^3 that have disjoint 0-skeletons and are in general position, then the components of $M_1 \cdot M_2$ are polyhedral simple closed curves.*

This can be proved by a straightforward analysis of how two 2-simplexes in general position can intersect and appropriate use of the Invariance of Domain theorem [**7**].

In the construction of Examples 0 and 1, the tori used were curved; however, we could have taken them to be polyhedral. We assume that this is the case and that S and $\sum \mathrm{Bd}\, T$ are in general position with disjoint 0-skeletons. If they are not then a slight movement will bring about such a situation. By Theorem 4 the components of $S \cdot \mathrm{Bd}\, T_2$ are simple closed curves. We are now in a position to state one of Bing's theorems [**5**] to show how the components of $S \cdot \mathrm{Bd}\, T_2$ lie on $\mathrm{Bd}\, T_2$.

THEOREM 5 (BING [**5**]). *If D is a polyhedral disk in general position*

with respect to Bd T_2, *the* 0-*skeletons are disjoint*, Bd $D \cdot$ Bd $T_2 = 0$, *and* J *is a component of* $D \cdot$ Bd T_2, *then* J *bounds a disk on* Bd T_2, *or* J *circles* Bd T_2 *once longitudinally and no times meridianally, or* J *circles* Bd T_2 *once meridianally and no times longitudinally.*

We have that our 2-sphere must intersect Bd T_2 in one of three ways; we will eliminate two of these ways and find that $S \cdot$ Bd T_2 contains a simple closed curve that circles Bd T_2 once meridianally and no times longitudinally. If all components of $S \cdot$ Bd T_2 bound disks on Bd T_2, then we can replace these one at a time as in the proof of the above theorem and produce a 2-sphere S' that contains T_1 on its interior and T_2 on its exterior. This cannot happen. Since every simple closed curve on S can be shrunk to a point in the complement of T_1, no component of $S \cdot$ Bd T_2 can circle Bd T_2 longitudinally. We therefore have at least one component of $S \cdot$ Bd T_2 that circles Bd T_2 once meridianally and no times longitudinally.

THEOREM 6. *The fundamental group of the complement of* $T_1 + T_2$ *is generated by two generators with* $a^{-1}dad^{-1} = d^{-1}ada^{-1}$. *A simple closed curve on* Bd T_0 *that circles* Bd T_0 *once meridianally cannot be shrunk to a point in* $E^3 - (T_1 + T_2)$.

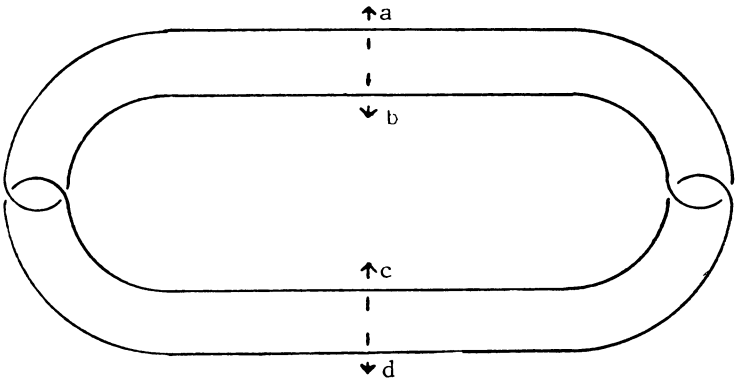

FIGURE 4A

By a standard method [6] reading from left to right in the crossings (Figure 4A) we have $ca = ad$, $cb = ac$, $db = bc$ and $da = bd$. These lead to $c = ada^{-1}$, $b = dad^{-1}$ and $a^{-1}dad^{-1} = d^{-1}ada^{-1}$. In this group $a^{-1}b$, which corresponds to a meridianal simple closed curve on Bd T_0, is not trivial as shown by the homomorphism given by $f(a) = (12)$ and $f(d) = (123)$ into the symmetric group on three letters.

By the two previous theorems, we find that S must contain a simple

closed curve that circles T_{21} or T_{22} once meridianally or once longitudinally. We would like to show that S contains a simple closed curve that circles at least one of them meridianally. Suppose S contains a simple closed curve J which circles T_{21} once longitudinally. One of the disks which J bounds on S must intersect T_{22}, since J cannot be shrunk to a point in the complement of T_{22}. If J' is a component of $S \cdot \text{Bd } T_2$ that goes around longitudinally, then J and J' are simple closed curves that lie on a 2-sphere and do not bound mutually exclusive disks; this is a contradiction.

We have shown that S intersects either T_{21} or T_{22} in the same manner that S intersects T_2. This shows that S must intersect a decreasing sequence of the T's, hence it must intersect their intersection. This shows that no 2-sphere separates the nondegenerate elements in T_2 from the torus T_1.

If S is a polyhedral 2-sphere in Int T_1, then S cannot contain $T_{11}+T_{12}$. This follows since a polyhedral 2-sphere bounds a 3-cell [1] and a meridianal simple closed curve on Bd T_1 could be shrunk to a point in Ext S. Therefore S must contain a simple closed curve that circles Bd T_1 once meridianally or once longitudinally. In either case we arrive at a contradiction as before.

This completes the proof of Theorem 3 for Example 0. A modification works for Example 1.

Let us summarize the results obtained about the fixed point set of each involution:

(a) Each is locally tame mod a Cantor set of points (the closure of the nondegenerate elements).

(b) The genus, with the exception of the point that corresponds to (0, 0, 2), of each point is 1 with respect to this Cantor set.

(c) The genus of the point that corresponds to (0, 0, 2) is 0 with respect to this Cantor set.

(d) The Cantor set of wild points is the sum of a point and a countable collection of sets (the nondegenerate elements in each K_m), no one of which can be separated by a 2-sphere.

(e) The part of the Cantor set of wild points in K_m and K_n $(m \neq n)$ can be separated by a 2-sphere, namely the boundaries of the chambers into which we broke the solid of revolution.

The above shows that if two of the involutions are equivalent, then the closure of the Cantor set of wild points of one must go onto the closure of the Cantor set of wild points of the other, (0, 0, 2) must go into (0, 0, 2), and the part of the Cantor set in K_i must go onto the part of the Cantor set in K_i.

All that remains to be shown is that Examples 0 and 1 differ. We

will do this by showing that the minimal arcs in the fixed point sets that contain the wild Cantor sets are inequivalently embedded.

THEOREM 7. *The fundamental group of the complement of the minimal arc in the fixed point set that contains the wild Cantor set in Example* 0 *is locally free. The fundamental group of the complement of the minimal arc in the fixed point set that contains the wild Cantor set in Example* 1 *is not locally free.*

A group is *locally free* if any finite subset generates a free subgroup.

First we will show that the complement of the arc in Example 1 does not have a locally free fundamental group. The fundamental group of the complement of $T_0' +$arc is given by (see Figure 4B): $i=ab$, $db=cd$, $cd=ec$, $de=ec$, $f=ae$, $hf=gh$, $ig=gh$ and $ig=hi$. These reduce to $b=e$, $d=c^{-1}ec$, $f=i$, $h=g^{-1}ig$, $a=ie^{-1}$, $ece=cec$ and $gig=igi$. Hence the group is generated by e, c, g and i with $ece=cec$ and $gig=igi$. By repeated use of Theorem 9 of [2] we find that the injection of $E^3-(T_0'+\text{arc})$ into $E^3-\text{arc}$ induces an isomorphism of $\pi_1(E^3-(T_0'+\text{arc}))$ into $\pi_1(E^3-\text{arc})$.

The group generated by e and c with $ece=cec$ is nonabelian as shown by the homomorphism $f(e)=(12)$, $f(c)=(13)$ onto the symmetric group on three letters. Hence if this group is a free group, it must have rank larger than one. We note that if this group is made abelian, then it is cyclic. This is a contradiction since if a free group has rank k, then that group made abelian has rank k in the free abelian sense.

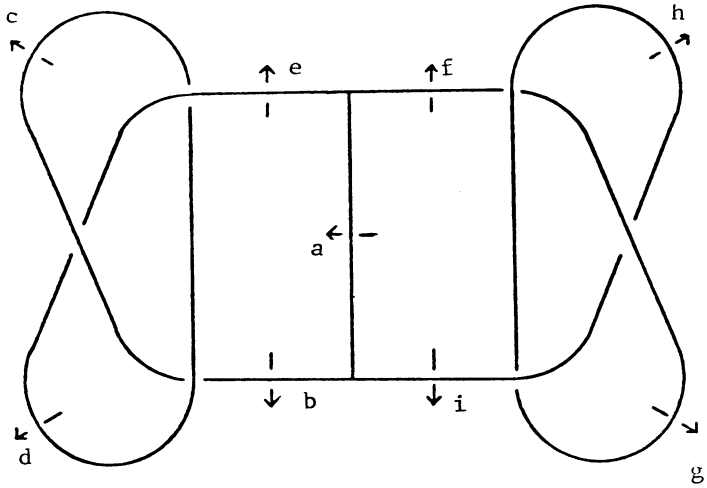

FIGURE 4B

The fundamental group of the appropriate arc in Example 0 can be thought of as the union of the fundamental groups of the complement in any stage, since the injections induce an isomorphism of π_1 of any stage into π_1 of any later stage (Theorem 9, [2]). Hence it suffices to show that $\pi_1(E^3-\text{arc})$ is the union of an ascending sequence of free groups.

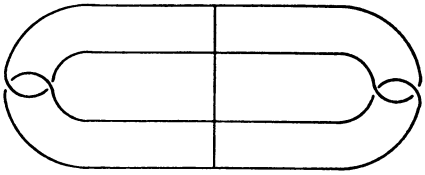

FIGURE 5A

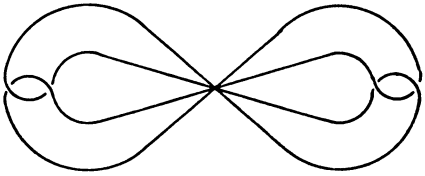

FIGURE 5B

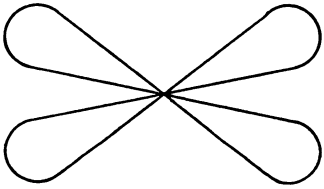

FIGURE 5C

Here we find that pictures tell a great deal more than words. The fundamental group of $E^3-(T_1+T_2+\text{arc})$ is the same as that of the complement of the configuration in Figure 5A. Figure 5B shows Figure 5A after the vertical arc has been squashed to a point by a function that is a homeomorphism on the complement of that arc. There is a homeomorphism of E^3 onto itself that takes the configuration in Figure 5B onto that configuration in Figure 5C. The fundamental group of the complement of that set is free of rank four. A collection of such pictures works in the nth stage and we have 2^n unknotted circles tangent to a point; the fundamental group of the complement of this set is free of rank 2^n. This completes the proof.

BIBLIOGRAPHY

1. J. W. Alexander, *On the subdivision of 3-space by a polyhedron*, Proc. Nat. Acad. Sci. U.S.A. **10** (1924), 6–8.

2. R. H. Bing, *A wild surface each of whose arcs is tame*, Duke Math. J. **28** (1961), 1–16.

3. ———, *A homeomorphism between the 3-sphere and the sum of two solid horned spheres*, Ann. of Math. **56** (1952), 354–362.

4. ———, *Approximating surfaces with polyhedral ones*, Ann. of Math. **65** (1957), 454–483.

5. ———, *Point-like decompositions of E^3*, Fund. Math. **50** (1961–1962), 431–453.

6. Richard H. Crowell and Ralph H. Fox, *Introduction to knot theory*, Ginn, New York, 1963.

7. Whitol Hurewicz and Henry Wallman, *Dimension theory*, Princeton Univ. Press, Princeton, N. J., 1941.

8. Deane Montgomery and Leo Zippin, *Examples of transformation groups*, Proc. Amer. Math. Soc. **5** (1954), 460–465.

9. P. A. Smith, *Fixed-point theorems for periodic transformations*, Amer. J. Math. **63** (1941), 1–8.

10. Ta-Sun Wu, *On the involutions of the three sphere*, Abstract 61T-268, Notices Amer. Math. Soc. **8** (1961), 518.

TULANE UNIVERSITY AND
THE FRANK J. SEILER RESEARCH LABORATORY, USAF ACADEMY