PROCEEDINGS OF THE
AMERICAN MATHEMATICAL SOCIETY
Volume 124, Number 9, September 1996

GEOMETRIC INDICES AND THE ALEXANDER POLYNOMIAL OF A KNOT

HIROZUMI FUJII

(Communicated by Ronald Stern)

ABSTRACT. It is well-known that any Laurent polynomial $\Delta(t)$ satisfying $\Delta(t) \doteq \Delta(t^{-1})$ and $\Delta(1) = \pm 1$ is the Alexander polynomial of a knot in S^3. We show that $\Delta(t)$ can be realized by a knot which has the following properties simultaneously: (i) tunnel number 1; (ii) bridge index 3; and (iii) unknotting number 1.

1. INTRODUCTION

In this paper, we study some geometric indices of a knot in the 3-sphere S^3: the tunnel number, the unknotting number, the bridge index, and the Alexander polynomial. The tunnel number of a knot K, $\tau(K)$, is the minimum number of mutually disjoint arcs properly embedded in the exterior of K such that the complementary space of $K \cup \{\text{arcs}\}$ is a handlebody. The unknotting number of K, $u(K)$, is the minimum number of exchanges of crossings required to deform K into a trivial knot over all knot diagrams representing K. The bridge index of K, $b(K)$, is the minimum number of n such that (S^3, K) is a tangle sum $(B_1^3, t_1) \cup (B_2^3, t_2)$, where (B_i^3, t_i) is a trivial n-string tangle, $i = 1, 2$. We denote by $\Delta_K(t)$ the Alexander polynomial of K.

Theorem 1. *For any Laurent polynomial $A(t) \in Z[t, t^{-1}]$ with $A(1) = \pm 1$ and $A(t) \doteq A(t^{-1})$, where $\doteq$ means "equal up to units", there exists a knot K in S^3 which satisfies the following conditions simultaneously:*

(i) $\Delta_K(t) = A(t)$,
(ii) $\tau(K) = 1$,
(iii) $b(K) = 3$, *and*
(iv) $u(K) = 1$.

Theorem 2. *There exists a set of mutually inequivalent knots $\{K_i\}_{i \in Z}$ such that each K_i satisfies the following conditions simulaneously:*

(i) $\Delta_K(t) = 1$,
(ii) $\tau(K) = 1$,
(iii) $b(K) = 3$, *and*
(iv) $u(K) = 1$.

Received by the editors March 15, 1995.
1991 *Mathematics Subject Classification.* Primary 57M25.
Key words and phrases. Tunnel number, bridge index, Alexander polynomial.

Note that a tunnel number one knot is strongly invertible [1]. For any Laurent polynomial $A(t)$ with $A(1) = \pm 1$ and $A(t) \doteq A(t^{-1})$, Kondo [8] and Sakai [17] constructed an unknotting number one knot whose Alexander polynomial is equal to $A(t)$. And then Sakai [18] showed that his knots are strongly invertible.

Let F_g be a genus g surface standardly embedded in S^3. Any knot can be embedded in F_g for some g. A torus knot is a knot which is embedded in F_1. According to the observation of C. Morin and M. Saito; cf. [13, p.138], a tunnel number one knot can be embedded in either F_1 or F_2.

From Theorem 1, we get the following result.

Corollary. *For any Laurent polynomial $A(t)$ with $A(1) = \pm 1$ and $A(t) \doteq A(t^{-1})$, there exists a knot embedded in F_2 whose Alexander polynomial is equal to $A(t)$.*

The Alexander polynomial of a torus knot has some restricted form. This is also true for the Alexander polynomial of a 2-bridge knot (cf. Hartley [5]). Sakuma proposed the following conjecture.

Conjecture. *For any Laurent polynomial $A(t)$ with $A(1) = \pm 1$ and $A(t) \doteq A(t^{-1})$, there exists a tunnel number one knot (resp. a 3-bridge knot) whose Alexander polynomial is equal to $A(t)$.*

Theorem 1 implies that this conjecture is true. The proofs are given in Sections 2 and 3; they are obtained by a small alteration of Sakai's construction in [17].

The author would like to thank Professor Akio Kawauchi and Professor Taizo Kanenobu for their helpful advice, and Professor Makoto Sakuma for suggesting this problem to the author.

2. Geometric indices

To prove Theorems 1 and 2, we consider two classes of knots $K(\alpha_1, \cdots, \alpha_n)$ and $J(\alpha, \beta, \gamma)$ as illustrated in Figure 1.

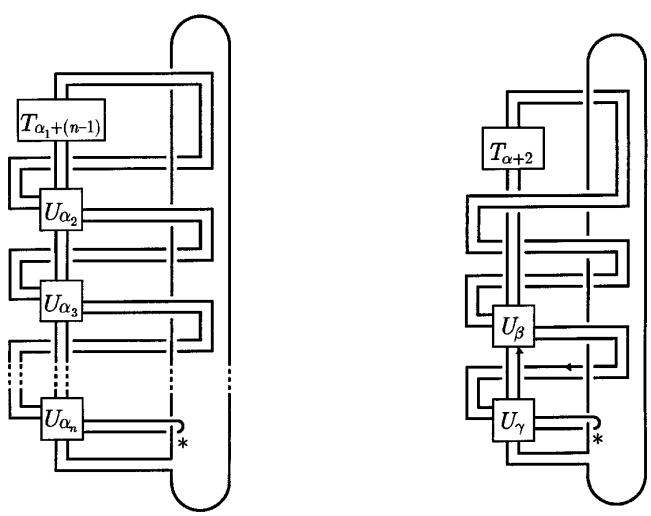

a b

Figure 1

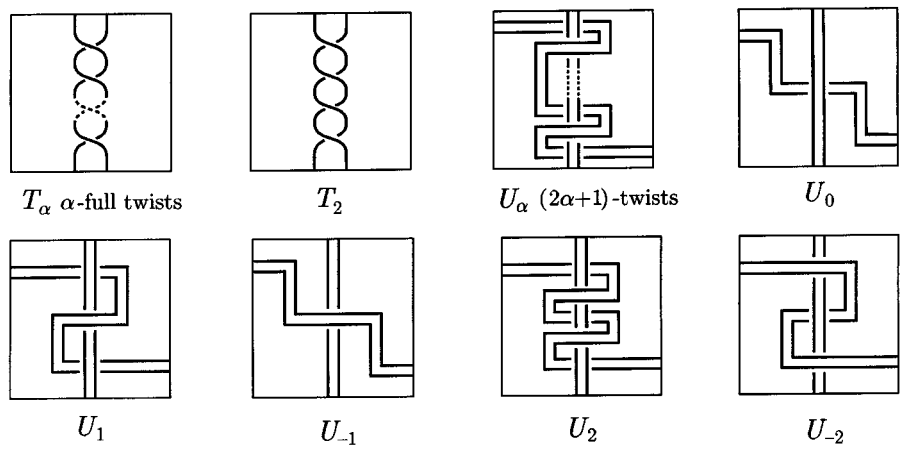

FIGURE 2

Here T_α is a 2-string tangle with left hand α-full twists, and U_α is a 4-string tangle with left hand $(2\alpha+1)$-half twists of two bands; see Figure 2. Note that "the band parts" of U_α are untwisted.

Then we easily see the upper bounds of the geometric indices.

Lemma 1. *The unknotting numbers of $K(\alpha_1, \cdots, \alpha_n)$ and $J(\alpha, \beta, \gamma)$ are less than or equal to one.*

Proof. Exchange the crossings $*$ in Figures 1a and 1b, and we get a trivial knot. □

Lemma 2. *The tunnel numbers of $K(\alpha_1, \cdots, \alpha_n)$ and $J(\alpha, \beta, \gamma)$ are less than or equal to one.*

Proof. Let $K = K(\alpha_1, \cdots, \alpha_n)$. For simplicity, we prove the lemma only in the case of $n = 4$. The proof in the general case is similar. We add the arc τ in $E(K)$ as illustrated in Figure 3a, and we have the deformations indicated in Figures 3a–3d. Then τ_2 in Figure 3d is an unknotting tunnel of the 2-bridge knot; see [1]. Hence $\tau(K) \leq 1$.

For $J(\alpha, \beta, \gamma)$, the unknotting tunnel τ and the deformation are given in Figures 4a–4c. □

To state Lemma 3, we recall the following results.

Proposition 1 ([12])**.** *Let K be a knot, and $\Sigma_2(K)$ the two-fold branched covering space of S^3 branched over K. If the unknotting number of K is one, then there exists a strongly invertible knot K' such that $\Sigma_2(K)$ can be obtained by the Dehn surgery of type $p/2$ on K', where p is an odd integer,*

Proposition 2 (Cyclic Surgery Theorem [3])**.** *Let K be a knot which is not a torus knot, and $K(r)$ the 3-manifold obtained by the Dehn surgery of type r on K ($r \in Q$). If the fundamental group $\pi_1(K(r))$ is cyclic, then r is an integer.*

We denote by $C(\alpha_1, \cdots, \alpha_n)$ ($\alpha_i \in Z$) the 2-bridge knot as shown in Figure 5; see [2].

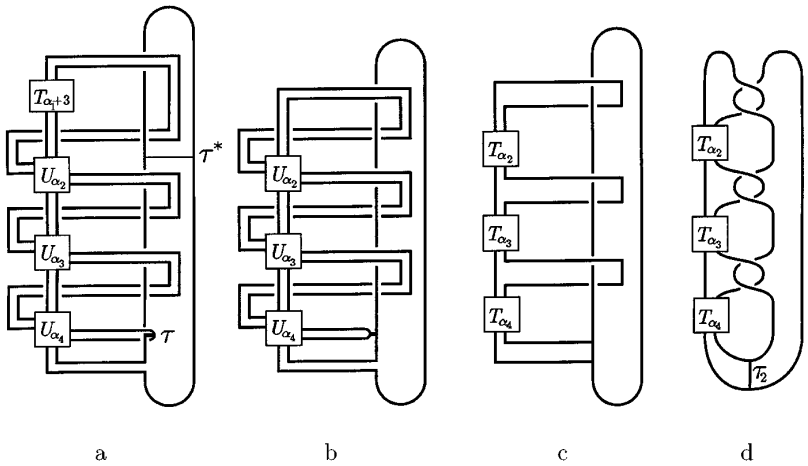

FIGURE 3

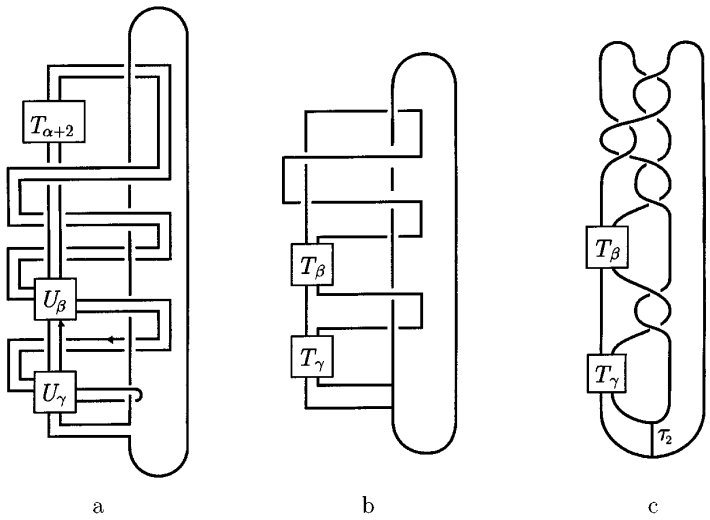

FIGURE 4

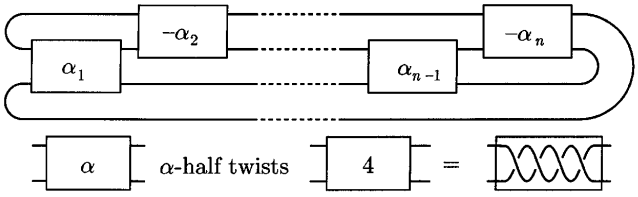

FIGURE 5

Proposition 3 ([6]). *We have the transformations of* 2*-bridge knots as follows:*

$$\begin{aligned} & C(x_1,\cdots,x_n,a,y,y_1,\cdots,y_m) \\ \cong\ & C(x_1,\cdots,x_n+\epsilon,||a||,(-1)^a(y+\epsilon),(-1)^a y_1,\cdots,(-1)^a y_m), \\ & C(x_1,\cdots,x_n,a)\cong C(x_1,\cdots,x_n+\epsilon,||a||), \end{aligned} \tag{1}$$

where $\epsilon = a/|a|$ *and* $||a|| = (\underbrace{-2\epsilon, 2\epsilon, \cdots, (-1)^{|a|-1}2\epsilon}_{|a|-1})$.

Lemma 3. *Let* K *be one of* $K(\alpha_1,\cdots,\alpha_n)$ $(n\geq 3$ *and* $\alpha_n\neq 0)$ *and* $J(\alpha,\beta,\gamma)$ $(\beta\neq 0$ *or* $\gamma\neq 0)$. *Then* $b(K)=3$.

Proof. Case 1. Let $K=K(\alpha_1,\cdots,\alpha_n)$ $(n\geq 3$ and $\alpha_n\neq 0)$. It is easy to see that $b(K)\leq 3$. We show that $b(K)\geq 3$. If K is a 2-bridge knot, then the two-fold branched covering space of S^3 branched over K, denoted by $\Sigma_2(K)$, is a lens space. So $\pi_1(\Sigma_2(K))$ is cyclic.

From Proposition 1 and the construction given in [12], we have that $\Sigma_2(K)$ is a 3-manifold obtained by Dehn surgery of type $p/2$ on the 2-bridge knot $C = C(-1,-4a_2,-1,-4a_3,-1,\cdots,-4a_n)$, where p is an odd integer; see Figure 6 in Section 3. By Proposition 2, it is sufficient to prove that C is not a torus knot. If C is a torus knot, then $C\cong \pm C(\underbrace{2,-2,\cdots,2,-2}_{|m|-1})$ which is a torus knot of type $(2,m)$. Using Proposition 3, we deform C as follows:

$$\begin{aligned} & C(-1,-4a_2,-1,-4a_3,-1,-4a_4,-1,\cdots,-4a_n) \\ \cong\ & C(-1+\epsilon_2,||-4a_2||,-1+\epsilon_2,-4a_3,-1,-4a_4,-1,\cdots,-4a_n) \\ \cong\ & \begin{cases} C(0,\underbrace{-2,2,\cdots,-2}_{|4a_2|-1},0,-4a_3,-1,-4a_4,-1,\cdots,-4a_n), & \text{if } \epsilon_2=1; \\ C(-2,\underbrace{2,-2,\cdots,2}_{|4a_2|-1},-2,-4a_3,-1,-4a_4,-1,\cdots,-4a_n), & \text{if } \epsilon_2=-1 \end{cases} \\ \cong\ & \begin{cases} C(2,-2,\cdots,2,-2+4a_3,0,\underbrace{-2,2,\cdots,-2}_{|4a_4|-1},0,\cdots,-4a_n), \\ \text{if } (\epsilon_2,\epsilon_4)=(1,1); \\ C(2,-2,\cdots,2,-2+4a_3,-2,||-4a_4||,-2,\cdots,-4a_n), \\ \text{if } (\epsilon_2,\epsilon_4)=(1,-1); \\ C(-2,||-4a_2||,-2,4a_3,0,\underbrace{-2,2,\cdots,-2}_{|4a_4|-1},0,\cdots,4a_n), \\ \text{if } (\epsilon_2,\epsilon_4)=(-1,1); \\ C(-2,||-4a_2||,-2,4a_3,-2,||-4a_4||,-2,\cdots,4a_n), \\ \text{if } (\epsilon_2,\epsilon_4)=(-1,-1), \end{cases} \end{aligned} \tag{2}$$

where $\epsilon_i=-a_i/|a_i|$ and $||a||=(\underbrace{-2\epsilon,2\epsilon,\cdots,(-1)^{|a|-1}2\epsilon}_{|a|-1})$. So C is not a torus knot.

Case 2. Let $K=J(\alpha,\beta,\gamma)$, where $\beta\neq 0$ or $\gamma\neq 0$.

From Figure 1b, we see that $b(K)\leq 3$. Next we show that $b(K)\geq 3$. In the same way as in Case 1, we consider the two-fold branched covering space $\Sigma_2(K)$

of S^3 branched over K which is obtained by Dehn surgery of type $p/2$ on the 2-bridge knot $C = C(1, -4, -1, -4\beta, -1, -4\gamma)$, where p is an odd integer. Using Proposition 3, we deform C as follows:

$$\begin{aligned} & C(1, -4, -1, -4\beta, -1, -4\gamma) \\ \cong\ & C(0, 2, -2, 2, -2, -4\beta, -1 + \epsilon_\gamma, || - 4\gamma||) \\ \cong\ & C(-2, 2, -2, -4\beta, -1 + \epsilon_\gamma, || - 4\gamma||) \\ \not\cong\ & \pm C(2, -2, \cdots, 2, -2), \end{aligned} \tag{3}$$

where $\epsilon_\gamma = -\gamma/|\gamma|$ and $|| - 4\gamma|| = (\underbrace{-2\epsilon_\gamma, 2\epsilon_\gamma, \cdots, (-1)^{4|\gamma|-1}\epsilon_\gamma}_{4|\gamma|-1})$.

From this, C is not a torus knot. Hence $\pi_1(\Sigma_2(K))$ is non-cyclic, and thus $b(K) \geq 3$. □

3. Alexander polynomial

Now we calculate the Alexander polynomials of the above two classes of knots.

Case 1. $K(\alpha_1, \cdots, \alpha_n)$. We deform $K(\alpha_1, \cdots, \alpha_n)$ as illustrated in Figures 6a–6d. Thus $(S^3, K(\alpha_1, \cdots, \alpha_n))$ is homeomorphic to $(T(1), K)$ in Figures 6e, where $T(1)$ is obtained by performing the Dehn surgery of type $+1$ in T (cf. [17]).

To calculate $\Delta_K(t)$, the Alexander polynomial of K, we use the infinite cyclic covering space $\widetilde{E}(K)$ of the exterior of K, $E(K)$; see Chapter 7 in [16]. The Alexander module of K, $H_1(\widetilde{E}(K); Z)$, is a $Z[t, t^{-1}]$-module, where t acts in $\widetilde{E}(K)$ as a covering translation. Let $\{\widetilde{T_i}\}_{i \in Z}$ be the system of the lifts of T in $\widetilde{E}(K)$, and c_0 the surgery coefficient of $\widetilde{T_i}$. Then $\widetilde{T_j} = t^j \widetilde{T_0}$. We put $c_j = lk(\widetilde{T_0}, \widetilde{T_j})$ $(j \neq 0)$. Then $c_j = c_{-j}$ for $j \geq 1$. Now $\widetilde{E}(K)$ is constructed from $\overset{\circ}{D}{}^2 \times R^1$ by removing the regular neighborhoods of $\{\widetilde{T_i}\}_{i \in Z}$ and replacing them with solid tori, where the surgery coefficients are c_0. Then we have

$$\begin{aligned} \Delta_K(t) &= 1 - 2\alpha_1 + \alpha_1(t + t^{-1}) + \alpha_2(t^2 - 2t + 2 - 2t^{-1} + t^{-2}) \\ &\quad + \sum_{i=3}^{n} \alpha_i(t^i - 2t^{i-1} + t^{i-2} + t^{-i+2} - 2t^{-i+1} + t^{-i}). \end{aligned} \tag{4}$$

Let $(\alpha_1, \cdots, \alpha_n)$ be the solution of $\begin{cases} c_n = \alpha_n, \\ c_{n-1} = \alpha_{n-1} - 2\alpha_n, \\ c_i = \alpha_i - 2\alpha_{i+1} + \alpha_{i+2} \ (1 \leq i \leq n-2), \\ c_0 = 1 - 2\sum_{j=1}^{n} c_j. \end{cases}$

Then, for any polynomial $A(t) = \sum_{j=-n}^{n} c_j t^j$ with $A(1) = 1$ and $c_j = c_{-j} (j \geq 1)$, the Alexander polynomial of $K(\alpha_1, \cdots, \alpha_n)$ is equal to $A(t)$.

As an example, we show it for the knot $K(-1, 1, -2)$ given in Figure 7. The infinite cyclic covering space is given in Figure 8.

Case 2. $J(\alpha, \beta, \gamma)$. We calculate the Alexander polynomial of $J(\alpha, \beta, \gamma)$ in the parallel way as in Case 1. $(S^3, J(\alpha, \beta, \gamma))$ is homeomorphic to $(T(1), K)$ in Figure 9c, where $T(1)$ is obtained by perfoming the Dehn surgery of type $+1$ in T. The infinite cyclic covering space of $\widetilde{E}(J(\alpha, \beta, \gamma))$ is shown in Figure 10, where $\{T_i\}_{i \in Z}$

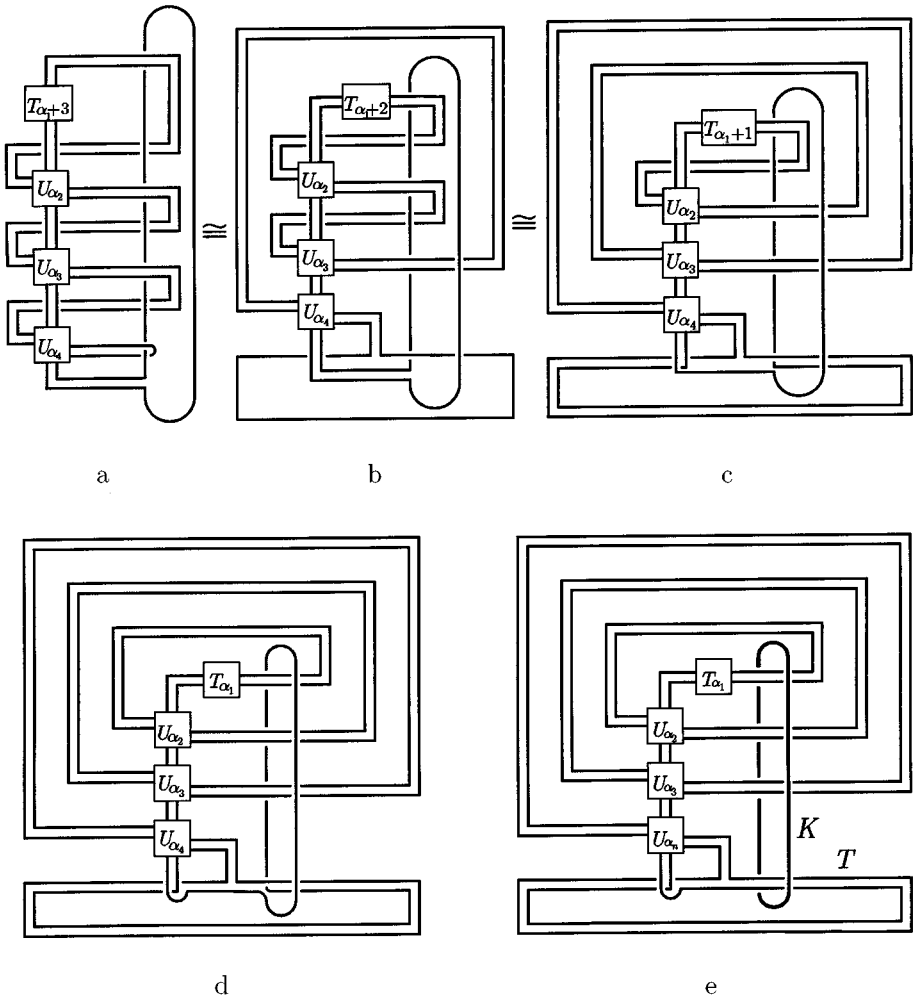

FIGURE 6

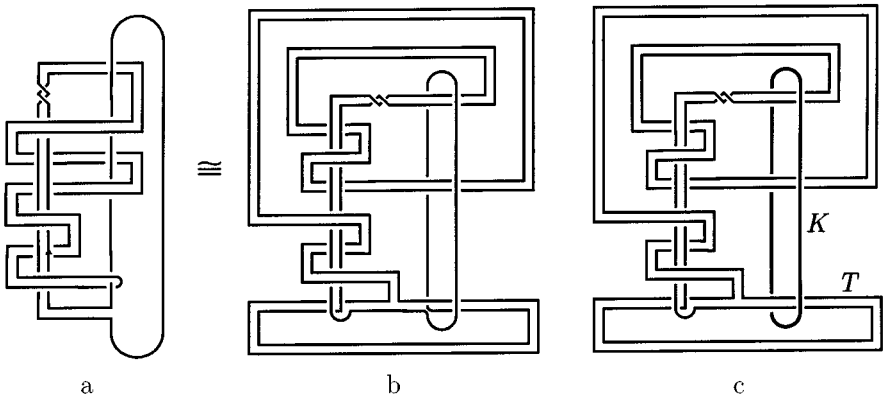

FIGURE 7

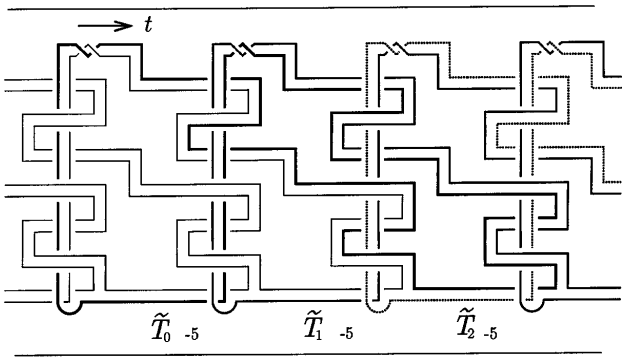

Figure 8

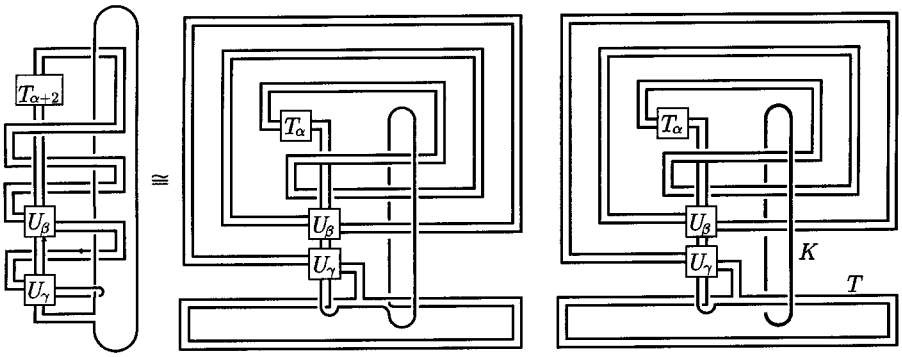

a b c

Figure 9

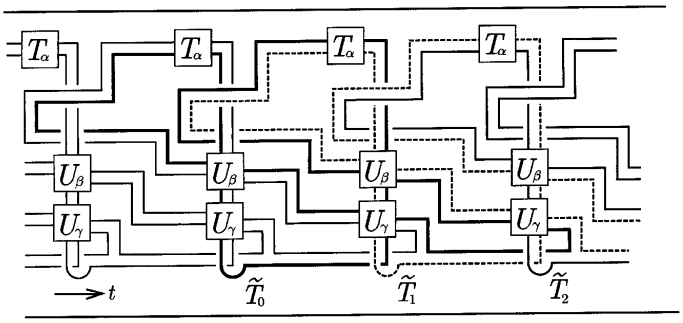

Figure 10

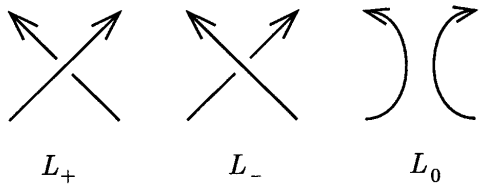

FIGURE 11

is the system of the lifts of T. We see that

(i) $lk(\widetilde{T_0}, \widetilde{T_1}) = \alpha + 2\beta - 2\gamma - 1$,
(ii) $lk(\widetilde{T_0}, \widetilde{T_2}) = 1 + \gamma$, and
(iii) $lk(\widetilde{T_0}, \widetilde{T_i}) = 0$ for $i \geq 3$.

Therefore, we have

$$\Delta_{J(\alpha,\beta,\gamma)}(t) \doteq 2\gamma - 2\alpha - 4\beta + 1 + (\alpha + 2\beta - 2\gamma - 1)(t + t^{-1}) + (\gamma + 1)(t^2 + t^{-2}).$$

If $A(t) = \sum_{i=-2}^{2} c_i t^i$, where $c_i = c_{-i}$ and $A(1) = 1$, then the Alexander polynomial of $J(\alpha, \beta, \gamma)$ is equal to $A(t)$, where $(\alpha, \beta, \gamma) = (c_1 + 2c_2 + 1, -1, c_2 - 1)$. In particular, $\Delta(J(-2\beta - 1, \beta, -1)) = 1$. We denote $J(-2\beta - 1, \beta, -1)$ by K_β.

To prove Lemma 4 below, we introduce a Laurent polynomial invariant ([7], Theorem 1.1), $c_0(K; x)$, determined by the following:

(i) $c_0(O; x) = 1, xc_0(L_+; x) - c_0(L_-; x) = c_0(L_0; x)$, where O is a trivial knot, L_+, L_- are knots and L_0 is a 2-component link, which are identical except near one point where they are as in Figure 11.

(ii) If $L = L_1 \cup L_2$ is a 2-component link with linking number λ, then

$$c_0(L; x) = (x - 1)x^{-\lambda} c_0(L_1; x) c_0(L_2; x).$$

This polynomial is a version of the first term of the skein polynomial [4], [11], [15].

Lemma 4. *Each K_β $(\beta \in Z)$ is non-trivial and $K_i \not\cong K_j$ if $i \neq j$.*

Proof. From Figure 12, we calculate the Laurent polynomial invariant of K_β, $c_0(K_\beta; x)$. From (i), we have

$$xc_0(K_\beta; x) - 1 = (x - 1)x^0 c_0(O; x) c_0(C(2, -2, -2, -2\beta, -2, 2); x),$$

and so, we have

$$\begin{aligned} c_0(K_\beta; x) &= x^{-1} + (x - 1)x^{-1} c_0(C(2, -2, -2, -2\beta, -2, 2); x) \\ &= x^{-3} - 3x^{-2} + 3x^{-1} + x^{\beta-2} - 3x^{\beta-1} + 3x^\beta - x^{\beta+1}, \end{aligned} \tag{5}$$

from which we obtain the result. □

Concluding remark. From Proposition 1.3 of [14], our two classes of knots have $(1, 1)$-decompositions. If a knot has a $(1, 1)$-decomposition, then its tunnel number is less than or equal to 1. The arc τ^* in Figure 3 is also an unknotting tunnel.

From the results of [9], [19], [20], an unknotting number 1 knot K with $b(K) \leq 3$ is a hyperbolic knot or a trefoil knot. So our knots are hyperbolic knots.

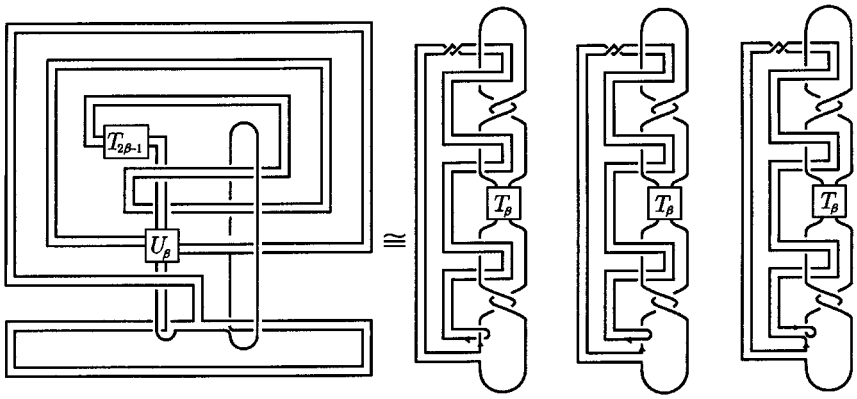

a b c d

Figure 12

References

1. A. Bleiler and Y. Moriah, *Heegaard splittings and branched coverings of B^3*, Math. Ann. **281** (1988), 531–543. MR **89k:**57006
2. J. Conway, *An enumeration of knots and links and some of their related properties.* In : Computational problems in Abstract Algebra (Oxford 1967). Pergamon Press (1970), pp. 329–358. MR **41:**2661
3. M. Culler, C. Gordon, J. Luecke, and P. Shalen, *Dehn surgery on knots*, Ann. of Math. **125** (1987), 237–300. MR **88a:**57026
4. P. Freyd, D. Yetter, J. Hoste, W. B. R. Lichorish, K. C. Millett, and A. Ocneanu, *A new polynomial invariant of knots and links*, Bull. Amer. Math. Soc. **12** (1985), 239–246. MR **86e:**57007
5. Hartley, R.: *On two-bridged knots polynomials*, J. Austral. Math. Soc. **28** (1979), 241–249. MR **81a:**57006
6. T. Kanenobu, *Genus and Kauffman polynomial of a 2-bridge knot*, Osaka J. Math. **29** (1992), 635–651. MR **93h:**57010
7. A. Kawauchi, *On coefficient polynomials of the skein polynomial of an oriented link*, Kobe J. Math. **11** (1994), 49–68. CMP 95:06
8. H. Kondo, *Knots of unknotting number one and their Alexander polynomials*, Osaka J. Math. **16** (1979), 551–559. MR **80g:**57008
9. F. B. Kronheimer and T. S.Mrowka, *Gauge theory for embedded surfaces, I*, Topology. **32** (1993), 773–826. MR **94k:**57048
10. W. B. R. Lickorish, *The unknotting number of a classical knot*, Comtemp. Math. **44** (1985), pp. 117–121. MR **87a:**57012
11. W. B. R. Lickorish and K. C. Millett, *A polynomial invariant of oriented links*, Topology. **26** (1987), pp. 107–141. MR **88b:**57012
12. J. M. Montesinos, *Surgery on links and double branched covers of S^3*, Ann. Math. Studies. **84** (1975), pp. 227–259. MR **52:**1699
13. K. Morimoto, *On the additivity of h-genus of knots*, Osaka J. Math. **31** (1994), 137–145. MR **95d:**57006
14. K. Morimoto and M. Sakuma, *On unknotting tunnel number for knot*, Math. Ann. **289** (1991), 143–167. MR **92e:**57015
15. J. H. Przytycki and P. Traczyk, *Invariants of links of Conway type*, Kobe J. Math. **4** (1987), 115–189. MR **89h:**57006
16. D. Rolfsen, *Knots and Links*, Publish or Perish, Berkeley, 1970. MR **58:**24236
17. T. Sakai, *A remark on the Alexander polynomials of knots*, Math. Sem. Notes Kobe Univ. **5** (1977), 451–456. MR **58:**12998
18. T. Sakai, *Polynomials of invertible knots*, Math. Ann. **266** (1983), 229–232. MR **85f:**57004

19. M. Scharlemann and A. Thompson, *Unknotting number, genus, and companion tori*, Math. Ann. **280** (1988), 191–205. MR **89d:**57008
20. H. Schubert, *Über eine numerische Knoteninvariante*, Math. Z. **61** (1954), 245–288. MR **17:**292a

Department of Mathematics, Osaka City University, Sugimoto, Sumiyoshi, Osaka, Japan