METHODS OF REPRESENTING THE PROPERTIES OF VISCOELASTIC MATERIALS*

BY

T. ALFREY

Monsanto Chemical Company, Research Department, Springfield, Mass.

Introduction. In a recent paper[1] it has been shown that the solution of the first and second boundary value problem for linear viscoelastic media can be obtained in two steps requiring (a) the solution of an equivalent problem for a perfectly elastic medium, and (b) the determination of the response of the viscoelastic material to an applied shearing stress (or shearing strain) which is a given function of time. The study of the behaviour of viscoelastic materials in pure shear is accordingly seen to be of particular importance. To coordinate various manners of describing this behaviour is the purpose of the present paper.

From the mathematical point of view the behaviour of a viscoelastic material in pure shear is represented by a differential relation between the shear stress s and the shearing strain ϵ. We may write this relation in the form

$$Ps = 2Q\epsilon, \tag{1}$$

where the differential operators P and Q are defined by

$$P = \frac{\partial^m}{\partial t^m} + p_{m-1}\frac{\partial^{m-1}}{\partial t^{m-1}} + \cdots + p_0,$$

$$Q = q_n\frac{\partial^n}{\partial t^n} + q_{n-1}\frac{\partial^{n-1}}{\partial t^{n-1}} + \cdots + q_0.$$

The $m+n+1$ coefficients $p_{m-1}, \cdots, p_0, q_n, \cdots, q_0$ are constants characterizing the mechanical properties of the material. Equation (1) can also be considered as the general stress strain relation of an incompressible viscoelastic medium. In this case, ϵ may be taken as denoting any component of the strain tensor and s as denoting the corresponding component of the deviatoric part of the stress tensor.

While Eq. (1) gives a complete mathematical description of the mechanical behaviour of a viscoelastic material in pure shear, it is often found useful to express this behaviour in terms of a mechanical analogue, or model, consisting of springs and dashpots. Figures 1 and 2 show typical models of this kind.

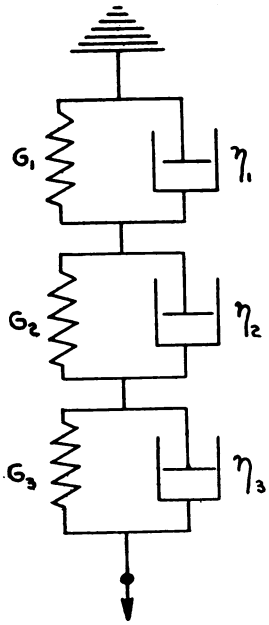

Fig. 1. Mechanical model: 3 Voigt elements in series.

Models of the first type, shown in Fig. 1, consist of retarded elements (Voigt elements) coupled in series. Each

* Received Nov. 15, 1944.

[1] T. Alfrey, Quarterly of Appl. Math. **2**, 113–119 (1944).

element is made up of a spring coupled in parallel with a dashpot. In such a model the total extension (corresponding to the strain ϵ) consists of n contributions, one from each of the n Voigt elements. The extension ϵ_i contributed by the ith element is connected with the load s by means of the relation

$$s = 2G_i\epsilon_i + 2\eta_i\dot{\epsilon}_i, \tag{2}$$

where G_i is the spring constant and η_i the dashpot constant of the ith element, and the dot indicates differentiation with respect to time. The load s is the same for all elements coupled in series, and corresponds to the stress in the viscoelastic body. The mechanical behaviour of the model is defined by n equations of the form (2) in conjunction with the relation $\epsilon = \sum \epsilon_i$ which defines the resulting extension ϵ.

Models of the second type, shown in Fig. 2, consist of another kind of composite elements (Maxwell elements) coupled in parallel. Each element is made up of a spring coupled in series with a dashpot. In such a model the total load (corresponding to the stress) is divided among the n elements. The load s_i carried by the ith element is connected with the extension ϵ by means of the relation

$$\dot{\epsilon} = \frac{1}{2G_i}\dot{s}_i + \frac{1}{2\eta_i}s_i, \tag{3}$$

where G_i and η_i have the same meaning as above. The extension ϵ is the same for all elements coupled in parallel and corresponds to the strain of the viscoelastic material. The mechanical behaviour of the model is defined by n equations of the form (3) together with the relation $s = \sum s_i$ which defines the resulting load s.

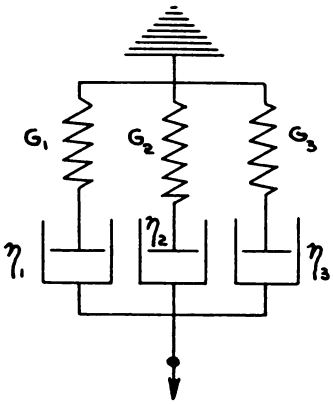

FIG. 2. Mechanical model: 3 Maxwell elements in parallel.

In a study of molecular mechanisms of viscoelastic deformation, a model of the type shown in Fig. 1 may be preferable to the general stress-strain relation (1). In such a study, each contribution to the strain may often be identified with some specific molecular process, and hence the strain contributions $\epsilon_1, \epsilon_2, \epsilon_3, \cdots, \epsilon_n$, as well as the total strain ϵ, can be said to possess a physical significance. Likewise some authors have attempted to identify the various stress contributions of a model of the type shown in Fig. 2 with individual "molecular mechanisms of supporting stress." From the point of view of mechanics of continua, on the other hand, the formulation (1) is preferable to any mechanical model, since in any macroscopic study only the total stress and total strain are observable quantities.

If the molecular and the macroscopic methods of approach to viscoelastic behaviour are not to become isolated from one another, it must be possible to change readily from one method of description to the other. It is the purpose of this paper to provide simple techniques for these conversions. The paper is divided into four parts corresponding to the following problems:

1. Given the constants occurring in the stress-strain relation (1), to compute the constants of the equivalent Voigt model.

2. Given the constants occurring in the stress-strain relation (1), to compute the constants of the equivalent Maxwell model.

3. Given the constants of a Voigt model, to compute the constants of the equivalent stress-strain relation.

4. Given the constants of a Maxwell model, to compute the constants of the equivalent stress-strain relation.

1. Determination of the constants of the Voigt model.

A. Nondegenerate case. In the standard or nondegenerate form of the stress-strain relation (1), the operator P is of an order one less than that of Q. The relation (1) thus has the form

$$\frac{\partial^{n-1}s}{\partial t^{n-1}} + p_{n-2}\frac{\partial^{n-2}s}{\partial t^{n-2}} + \cdots + p_0 s = 2q_n\frac{\partial^n \epsilon}{\partial t^n} + \cdots + 2q_0\epsilon. \tag{4}$$

If both the coefficients q_0 and q_n do not vanish, the corresponding mechanical model will consist of n Voigt elements, all nondegenerate. If $q_n = 0$, one element of the model consists of a spring only, and if $q_0 = 0$ one element consists of a dashpot only. These degenerate cases will be considered in the following sections. Cases are also possible where some other coefficient vanishes. This does not affect the form of the resulting model or the nature of the mathematical treatment.

A given Voigt element is defined by its constants G and η. The compliance J is defined as the reciprocal of G; $J = 1/G$. The retardation time τ of the element is defined as $\tau = \eta/G = J\eta$. Our problem is to compute, from the $2n$ coefficients of the nondegenerate stress-strain relation the $2n$ parameters of the mechanical model. The method given below depends upon the fact that both the model and the stress-strain relation must give the same prediction as to how the total strain will change with time when a given stress $s(t)$ is applied. It is sufficient to equate the responses to the particular stress $s(t) = t^{n-1}$. The general solution of the equation $P(t^{n-1}) = 2Q\epsilon$ is the sum of the general solution of the associated homogeneous equation $Q\epsilon = 0$ and the particular polynomial solution of the complete equation. In the same way, the response of the model to the stress t^{n-1} is the sum of the general response to a zero stress and a particular polynomial response to the stress t^{n-1}. If the response of the model is to be identical with that predicted by the stress-strain relation, the constants of the model must satisfy certain conditions. First, the retardation times τ_i $(i = 1, 2, \cdots, n)$ of the Voigt elements are the negative reciprocals of the roots x_i of the characteristic equation $q_n x^n + q_{n-1}x^{n-1} + \cdots + q_0 x + q_0 = 0$;

$$\tau_i = -\frac{1}{x_i}\cdot \tag{5}$$

Thus, the n retardation times of the model are determined by the general solution of the homogeneous differential equation.

In order to complete the specification of the model the particular polynomial solution must now be used. The particular polynomial solution of the equation $P(t^{n-1}) = 2Q\epsilon$ will be of the form

$$2\epsilon(t) = a_0 + a_1 t + a_2 t^2 + \cdots + a_{n-1}t^{n-1}. \tag{6}$$

The coefficients $a_0, a_1, \cdots, a_{n-1}$ are determined in the usual manner.

In order to obtain the model strain ϵ corresponding to the stress $s=t^{n-1}$, we consider first the behaviour of a single element under this stress. Equation (2) can be written in the form

$$J_i s = 2\epsilon_i + 2\tau_i\dot{\epsilon}_i.$$

Setting $s=t^{n-1}$ and determining the polynomial solution of this differential equation for ϵ_i, we find

$$2\epsilon_i = (n-1)!J_i\left[\frac{t^{n-1}}{(n-1)!} - \tau_i\frac{t^{n-2}}{(n-2)!} + \tau_i^2\frac{t^{n-3}}{(n-3!)} - \cdots - (-1)^{n-1}\tau_i^{n-1}t - (-1)^n\tau_i^n\right]. \tag{7}$$

Since the total strain is $\epsilon=\sum\epsilon_i$, comparison of (6) and (7) shows that the compliances J_i must satisfy the linear equations

$$\left.\begin{aligned} a_{n-1} &= \sum_{i=1}^{n} J_i, \\ a_{n-2} &= (n-1)\sum_{i=1}^{n} J_i/x_i, \\ a_{n-3} &= (n-1)(n-2)\sum_{i=1}^{n} J_i/x_i^2, \\ &\cdots\cdots\cdots\cdots \\ a_0 &= (n-1)!\sum_{i=1}^{n} J_i/x_i^{n-1}, \end{aligned}\right\} \tag{8}$$

where the retardation times τ_i have been expressed in terms of the roots x_i of the characteristic equation in accordance with (5).

The Voigt model is completely specified when the compliance and retardation time of each Voigt element are determined.

B. Degenerate case; $q_0=0$. If the coefficient q_0 of the differential operator Q is zero, one of the roots, x_1 say, of the characteristic equation vanishes. This indicates that the spring constant G of the first element is zero, the element consisting of a dashpot only. In this case the compliances J_i can no longer be found from the linear equations (8) because of the infinite terms $1/x_1$, $1/x_1^2$, $\cdots$. A parameter may be substituted for the zero coefficient q_0, the $2n$ parameters $\eta_1, G_1, \eta_2, G_2, \cdots, \eta_n, G_n$, may be determined in terms of this parameter, and finally the parameter may be allowed to approach zero and the limiting values of these $2n$ parameters obtained. However, this involves a complicated procedure even in simple cases. The following alternative treatment of this degenerated case seems preferable.

The total extension ϵ of the model consists of the extension ϵ_1 of the degenerate first element and the extension ϵ' of the chain of $n-1$ nondegenerate elements; $\epsilon=\epsilon_1+\epsilon'$. The mechanical behaviour of the degenerate element is given by

$$\frac{1}{\eta_1}s = 2\dot{\epsilon}_1, \tag{9}$$

and that of the chain of $n-1$ nondegenerate elements, by a relation of the form

$$P's = 2Q'\epsilon', \tag{10}$$

where the differential operators P' and Q' are of the orders $n-2$ and $n-1$, respectively. Applying the operator Q' to both sides of (9), differentiating (10) with respect to time and adding, we obtain

$$P'\dot{s} + \frac{1}{\eta_1} Q's = 2Q'(\dot{\epsilon}' + \dot{\epsilon}_1) = 2Q'\dot{\epsilon}. \tag{11}$$

With

$$\left.\begin{aligned} P' &= \frac{\partial^{n-2}}{\partial t^{n-2}} + p'_{n-3}\frac{\partial^{n-3}}{\partial t^{n-3}} + \cdots + p'_0, \\ Q' &= q'_{n-1}\frac{\partial^{n-1}}{\partial t^{n-1}} + q'_{n-2}\frac{\partial^{n-2}}{\partial t^{n-2}} + \cdots + q'_0, \end{aligned}\right\} \tag{12}$$

Eq. (11) becomes

$$\left[\left(1 + \frac{q'_{n-1}}{\eta_1}\right)\frac{\partial^{n-1}}{\partial t^{n-1}} + \left(p'_{n-3} + \frac{q'_{n-2}}{\eta_1}\right)\frac{\partial^{n-2}}{\partial t^{n-2}} + \cdots + \left(p'_0 + \frac{q'_1}{\eta_1}\right)\frac{\partial}{\partial t} + \frac{q'_0}{\eta_1}\right]s$$
$$= 2\left[q'_{n-1}\frac{\partial^n}{\partial t^n} + q'_{n-2}\frac{\partial^{n-1}}{\partial t^{n-1}} + \cdots + q'_0\frac{\partial}{\partial t}\right]\epsilon. \tag{13}$$

When both sides of (13) are divided by the coefficient of the highest order term on the left-hand side, this equation must be identical with the stress-strain relation (1) in which $q_0 = 0$. Comparison of the lowest order terms leads to the relation

$$\eta_1 = q_1/p_0;$$

comparison of the highest order terms leads to

$$1 + \frac{q'_{n-1}}{\eta_1} = \left[1 - \frac{p_0}{q_1}q_n\right]^{-1}.$$

Abbreviating this expression by r, we find by further comparison of coefficients in (13) and (1) that

$$\left.\begin{aligned} &q'_{n-1} = rq_n,\ q'_{n-2} = rq_{n-1}, \cdots, q'_0 = rq_1 \\ &p'_{n-3} = r\left(p_{n-2} - \frac{p_0}{q_1}q_{n-1}\right), \\ &p'_{n-4} = r\left(p_{n-3} - \frac{p_0}{q_1}q_{n-2}\right), \\ &\cdots\cdots\cdots\cdots\cdots\cdots \\ &p'_0 = r\left(p_1 - \frac{p_0}{q_1}q_2\right). \end{aligned}\right\} \tag{14}$$

The differential operators (12) are thus determined, and the procedure outlined under 1A permits the determination of the constants of the $n-1$ nondegenerate elements.

C. Degenerate case; $q_n=0$. If the coefficient q_n of the operator Q is zero, one Voigt element of the corresponding model consists of a spring only. The compliance of this isolated spring can be shown to equal $1/q_{n-1}$. A procedure similar to the one developed above will permit to determine the constants of the nondegenerate elements.

2. Determination of the constants of the Maxwell model.

A. Nondegenerated case; A nondegenerate model of the Maxwell type corresponds to stress-strain relation (1) in which $q_n=0$ and $q_0=0$ (i.e., to a doubly degenerate Voigt model). When the operators are of this standard form, the model will consist of m Maxwell elements in parallel. The $2m$ constants of this model can be computed from the $2m$ coefficients of the stress-strain relation by a method which, except for the interchange of stress and strain, is almost identical with that of Section 1.

For any given imposed strain sequence $\epsilon(t)$, the stress must vary in a definite fashion $s(t)$. The predictions of Eq. (1) and the set of differential equations (3) must be identical for every case—in particular, for the strain sequence $\epsilon(t)=t^m$. The results are as follows:

The m relaxation times of the m Maxwell elements are the negative reciprocals of the m roots of the characteristic equation $x^m+p_{m-1}x^{m-1}+\cdots+p_1x+p_0=0$;

$$\tau_i = -\frac{1}{x_i}\cdot \tag{15}$$

The specification of the model is completed by determination of the m dashpot constants $\eta_1\cdots\eta_m$. These are obtained by solving the following set of m linear equations.

$$\left.\begin{aligned} a_{m-1} &= m\sum_{i=1}^{m}\eta_i, \\ a_{m-2} &= m(m-1)\sum_{i=1}^{m}\eta_i/x_i, \\ &\cdots\cdots\cdots\cdots \\ a_0 &= m!\sum_{i=1}^{m}\eta_i/x_i^{m-1}, \end{aligned}\right\} \tag{16}$$

where the a_i are the coefficients of the particular polynomial solution

$$s(t) = a_0 + a_1t + a_2t^2 + \cdots + a_{m-1}t^{m-1}$$

of the differential equation

$$Ps = 2Qt^m.$$

B. Degenerate case; $q_n\neq 0$, $q_0=0$. If the order of the operator Q is one greater than that of P (i.e., if $q_n\neq 0$), then one Maxwell element of the model consists of a dashpot only. The constant of this isolated dashpot is found to equal q_n. A procedure patterned on that of Section 1B will permit the determination of the constants of the remaining nondegenerate elements.

C. Degenerate case; $q_0\neq 0$, $q_n=0$. If the coefficient q_0 does not vanish, then the model contains one element which consists of a spring only. The constant G_1 of this spring, is found to equal q_0/p_0. The constants of the remaining nondegenerate elements can again be determined by a procedure similar to that of Section 1B.

3. Determination of the operators P and Q from the constants of a Voigt model. Consider a material whose behavior in shear is reproduced by a model consisting of n Voigt elements in series. The $2n$ parameters of this model are known. The equivalent relationship between stress and strain can be determined by either of two straightforward methods.

1. The method of part 1A can be used in reverse. This immediately gives an operator which is directly proportional to Q.

$$\lambda Q = \prod_{i=1}^{n}\left(\frac{\partial}{\partial t} + \frac{1}{\tau_i}\right), \tag{17}$$

where λ is an undetermined multiplier.

The operator P can subsequently be determined by equating the particular polynomial responses to a stress $s = t^{n-1}$.

2. The mechanical behaviour of the Voigt model is expressed by the following set of equations:

$$\left.\begin{aligned} s &= 2G_1\epsilon_1 + 2\eta_1\dot{\epsilon}_1, \\ s &= 2G_2\epsilon_2 + 2\eta_2\dot{\epsilon}_2, \\ &\vdots \\ s &= 2G_n\epsilon_n + 2\eta_n\dot{\epsilon}_n, \\ \epsilon &= \sum_{i=1}^{n}\epsilon_i. \end{aligned}\right\} \tag{18}$$

The nth equation can be rewritten, as

$$s = 2G_n\left(\epsilon - \sum_{i=1}^{n-1}\epsilon_i\right) + 2\eta_n\left(\dot{\epsilon} - \sum_{i=1}^{n-1}\dot{\epsilon}_i\right). \tag{19}$$

If each of these equation is differentiated $(n-1)$ times, a total of n^2 equations will result. These equations will contain (n^2-1) derivatives of the form $\partial^r\epsilon_i/\partial t^r$. All of these derivatives can be eliminated, leaving a differential relation between s and ϵ, by multiplying each of the n^2 equations by an appropriate factor and adding. The determination of the factors may, of course, be rather cumbersome.

3. The problem can, however, be simplified by a judicious combination of methods (1) and (2). We determine first the operator λQ in accordance with (17). We then formulate the set of n^2 equations considered above. n of the necessary n^2 factors can immediately be written down. They are obtained from the coefficients of the operator (17). The form of the n^2 equations is such that the remaining factors can be evaluated one at a time if the above set of n factors is known. The result of this procedure is the desired operator equation.

4. Determination of the operators P and Q from the constants of a Maxwell Model. Consider a material whose behaviour in shear can be reproduced by a model consisting of n Maxwell elements in parallel. The $2n$ parameters of this model are known. The equivalent relationship $Ps = 2Q\epsilon$ can be determined by methods almost identical with those of Section 3. Only the simplified third method will be repeated here.

The operator P is given by the equation

$$\lambda P = \prod_{i=1}^{n}\left(\frac{\partial}{\partial t} + \frac{1}{\tau_i}\right), \tag{20}$$

where λ is again an undetermined multiplier. The mechanical behaviour of the model is expressed by the equations

$$\left.\begin{array}{l} \dot{\epsilon} = \dfrac{1}{2G_1}\dot{s}_1 + \dfrac{1}{2\eta_1}s_1 \\ \vdots \\ \dot{\epsilon} = \dfrac{1}{2G_n}\left(\dot{s} - \sum\limits_{i=1}^{n-1}\dot{s}_i\right) + \dfrac{1}{2\eta_n}\left(s - \sum\limits_{i=1}^{n-1}s_i\right) \end{array}\right\}. \tag{21}$$

If each of these equations is differentiated $(n-1)$ times, a total of n^2 equations are obtained, involving n^2-1 derivatives of the form $\partial^r s/\partial t^r$. All of these derivatives can be eliminated, leaving the desired stress-strain relation, by multiplying each equation by an appropriate factor and adding. The n coefficients of the operator (20) provide n of these factors. The remaining (n^2-n) factors can then be obtained one at a time.