In terms of η then the first approximation to the temperature distribution in this example has the form

$$\theta(\xi, \eta) = (\theta_w + 8\nu)\{P[\xi, 2\nu(1 + \eta)] + P[\xi, 2\nu(1 - \eta)]\}$$

$$- 4\nu \int_0^\xi \{P[\tau, 2\nu(1 + \eta)] + P[\tau, 2\nu(1 - \eta)]\}\, d\tau$$

$$- 8\nu[e^{-2\nu(1+\eta)} + e^{-2\nu(1-\eta)}] + 4\xi\eta^2 \frac{1 - \eta^{2\nu-2}}{1 - \eta^2}$$

where $2\nu = \epsilon^{-1/3}$.

THE THICKNESS OF A SHOCK WAVE IN AIR*

By A. E. PUCKETT and H. J. STEWART (*California Institute of Technology*)

1. If the viscosity and heat conductivity of a gas are neglected, it is easy to show that a one-dimensional supersonic flow of this gas may be interrupted by a discontinuity, or shock wave, across which the velocity jumps to a subsonic value (see [1] and [2]†). In a real gas, viscosity and heat conduction may be negligible through a large part of a supersonic flow field but clearly must become important in the neighborhood of the large velocity gradients associated with a shock wave. If these effects are considered in the equations of motion, it is seen that the deceleration corresponding to the velocity jump through a shock wave must actually occur in a finite, although short, distance.

The first theory of the thickness of a shock wave was given by Rayleigh [3] who assumed that the fluid was a thermally and calorically perfect gas, that the viscosity coefficient μ was constant and that the heat transfer coefficient λ was zero. Taylor [1] considered the effect of a constant, non-zero value of λ by assuming that the velocity jump across the shock wave was small compared with the local speed of sound. Becker [4] noticed that a solution could be obtained without linearization in the special case that the Prandtl number $\sigma = C_P\mu/\lambda = 0.75$, where C_P is the specific heat at constant pressure. In all of these investigations the physical constants, C_P , μ and λ, were considered to be constant, and the linear (Navier-Stokes) theories of the viscous stress tensor and the heat flux vector were used. All of these investigations showed the width of a shock wave in air at normal conditions to be extremely small; for strong shock waves the width was computed to be less than the molecular mean free path. In view of these results, several writers (see [5] and [6]) have discussed the influence of deviations from thermodynamic equilibrium and of the higher order, non-linear (Burnett) terms in the viscous stress tensor and heat flux vector.

In the present note the problem of the width of a shock wave in air is re-examined using a thermally perfect gas and the linear (Navier-Stokes) theories of the viscous stress tensor and the heat flux vector. It is found that the solution can be carried

*Received Dec. 13, 1948.

†Numbers in the brackets refer to the bibliography at the end of the paper.

through with the physical parameters, C_P , μ and λ, given as functions of the absolute temperature T, provided $\sigma = 0.75$. Since the experimental determination of the value of λ for air at high temperatures is very difficult, accurate data on the variation of σ do not exist; however the available data show that σ is nearly constant and varies from about 0.77 at 0° C to 0.72 at 300° C. The special solution considered here is thus a reasonable approximation. If the variation of the physical parameters is taken into account, the shock wave width, even for the limiting case of an infinitely strong shock wave, is found to be several molecular mean free paths; consequently the importance of the Burnett stresses and of the deviations from thermodynamic equilibrium is greatly reduced, although not eliminated.

2. It is assumed that the gas obeys the perfect gas law, $P = \rho RT$, where P and ρ are the pressure and density, respectively, and R is the gas constant. This implies that the enthalpy h is a function of the temperature only and that $C_P = dh/dT$. The continuity equation is

$$\frac{\partial \rho}{\partial t} + \frac{\partial}{\partial x_i}(\rho u_i) = 0, \tag{1}$$

where u_i is the velocity vector. The equations of motion are

$$\frac{\partial u_i}{\partial t} + u_j \frac{\partial u_i}{\partial x_j} = -\frac{1}{\rho}\frac{\partial P}{\partial x_i} + \frac{1}{\rho}\frac{\partial}{\partial x_j}(\tau_{ij}), \tag{2}$$

where the stress tensor τ_{ij} is given by the linear theory as

$$\tau_{ij} = \mu\left(\frac{\partial u_i}{\partial x_j} + \frac{\partial u_j}{\partial x_i}\right) - \frac{2}{3}\mu\delta_{ij}\frac{\partial u_k}{\partial x_k}. \tag{3}$$

The corresponding equation for the conservation of energy is most easily derived (see [7] or [8]) in the form

$$\frac{\partial}{\partial x_i}\left(\lambda\frac{\partial T}{\partial x_i}\right) + \frac{\partial}{\partial x_i}(\tau_{ij}u_j) = \rho\frac{D}{Dt}\left(h - \frac{P}{\rho} + \frac{u_iu_i}{2}\right) + \frac{\partial}{\partial x_i}(Pu_i). \tag{4}$$

A simpler form may be obtained by using the continuity equation to transform the last term of Eq. (4). It is thus seen that

$$\frac{\partial}{\partial x_i}\left(\lambda\frac{\partial T}{\partial x_i}\right) + \frac{\partial}{\partial x_i}(\tau_{ij}u_j) = \rho\frac{D}{Dt}\left(h + \frac{u_iu_i}{2}\right) - \frac{\partial P}{\partial t}. \tag{5}$$

If these general equations are applied to a plane shock wave, the motion is reduced to a steady state motion in a coordinate system stationary with respect to the wave. The only velocity component, u, is normal to the wave front; so the flow is one-dimensional in x, the distance normal to the shock wave front. Under these conditions the continuity equation can be integrated to

$$\rho u = m, \tag{6}$$

where m is the mass flow constant. The only non-vanishing stress component is $\tau_{xx} = (4\mu/3)\,(du/dx)$. Consequently, the equation of motion is

$$\frac{d}{dx}\left(mu + P - \frac{4}{3}\mu\frac{du}{dx}\right) = 0. \tag{7}$$

This can be integrated to

$$\frac{4}{3}\mu\frac{du}{dx} = mu + P - mB. \tag{8}$$

Since the velocity gradient must vanish asymptotically far ahead of the shock wave (section 1) and far behind the wave (section 2),

$$mB = \rho_1 u_1^2 + P_1 = \rho_2 u_2^2 + P_2 . \tag{9}$$

The energy equation (5) becomes

$$m\frac{d}{dx}\left(h + \frac{1}{2}u^2\right) = \frac{d}{dx}\left(\lambda\frac{dT}{dx} + \frac{4}{3}\mu u\frac{du}{dx}\right). \tag{10}$$

Since $h = h(T)$ and $C_P = dh/dT$,

$$\lambda\frac{dT}{dx} = \frac{\lambda}{C_P}\frac{dh}{dx} = \frac{\mu}{\sigma}\frac{dh}{dx}. \tag{11}$$

If the Prandtl number is constant, Eq. (10) can thus be written

$$m\frac{d}{dx}\left(h + \frac{1}{2}u^2\right) = \frac{d}{dx}\left[\frac{\mu}{\sigma}\frac{d}{dx}\left(h + \frac{2}{3}\sigma u^2\right)\right]. \tag{12}$$

This can be integrated at once to

$$h + \frac{1}{2}u^2 = A + \frac{\mu}{\sigma m}\frac{d}{dx}\left(h + \frac{2}{3}\sigma u^2\right) \tag{13}$$

Since the gradients must vanish at sections 1 and 2,

$$A = h_1 + 1/2\, u_1^2 = h_2 + 1/2\, u_2^2 . \tag{14}$$

Furthermore, if $\sigma = 0.75$, Eq. (14) shows that the appropriate integral of Eq. (13) is

$$h + 1/2\, u^2 = A \tag{15}$$

The simple shock theory is obtained by solving Eqs. (9) and (14) together with the equation of state in the form $pu = mRT$ and the enthalpy relation $h = h(T)$.

The theory of the shock wave thickness is obtained by solving Eqs. (8) and (15), together with $pu = mRT$ and $h = h(T)$. An interesting feature of this solution is obtained by considering the point at which the viscous stress [Eq. (8)] is a maximum. At this point

$$0 = m\frac{d}{dx}\left(u + \frac{RT}{u}\right). \tag{16}$$

By Eq. (15) the condition of Eq. (16) becomes (since $C_P = C_V + R$)

$$u^2 = \frac{C_P}{C_V}RT, \tag{17}$$

i.e., the maximum viscous stress occurs at the point where the speed is equal to the local isentropic speed of sound. The fluid properties at this condition will be denoted by u_*, T_*, etc.

The solution of the velocity distribution through the shock wave can be written formally, after substituting $pu = mRT$ in Eq. (8), as

$$\frac{3}{4} mx = \int \frac{\mu u \, du}{u^2 + RT - Bu}, \tag{18}$$

where the enthalpy, and thus T and μ, is known as a function of u by Eq. (15). In general, numerical procedures must be used to integrate Eq. (18). It is of interest to note that a solution could also be obtained for any value of σ; the coordinate x could easily be eliminated between Eqs. (8) and (10), leaving a first order, first degree differential equation for $T(u)$ which could then be integrated numerically as the replacement for Eq. (15).

3. As an example of this theory, consider the case in which the gas is calorically perfect, so that C_P is constant, and in which μ is also constant (Becker's problem). For this case Eq. (15) is

$$C_P T + 1/2 \, u^2 = A, \tag{19}$$

and Eq. (8) can be written

$$\frac{4\mu}{3m} u \frac{du}{dx} = u^2\left(\frac{\gamma + 1}{2\gamma}\right) - Bu + A\left(\frac{\gamma - 1}{\gamma}\right), \tag{20}$$

where $\gamma = C_P/C_V$. By the relations of the corresponding simple shock wave theory, $u_1 u_2 = u_*^2$, $B = (u_1 + u_2)(\gamma + 1)/2$ and $A = u_1 u_2(\gamma + 1)/2(\gamma - 1)$. Thus

$$\frac{8\gamma\mu}{3(\gamma + 1)m} u \frac{du}{dx} = (u - u_1)(u - u_2). \tag{21}$$

The integral of Eq. (21) is

$$x = \frac{8\gamma\mu}{3(\gamma + 1)m} \frac{u_2}{(u_1 - u_2)} \left[\frac{u_1}{u_2} \log \frac{u - u_1}{u_* - u_1} - \log \frac{u - u_2}{u_* - u_2}\right], \tag{22}$$

where $x_* = 0$. Let $\bar{u} = u/u_*$ so $\bar{u}_1 \bar{u}_2 = 1$; then

$$R_x = \frac{\rho_1 u_1 x}{\mu} = \frac{8\gamma}{3(\gamma + 1)(\bar{u}_1^2 - 1)} \left\{\bar{u}_1^2 \log\left(\frac{\bar{u}_1 - \bar{u}}{\bar{u}_1 - 1}\right) - \log\left(\frac{\bar{u}\bar{u}_1 - 1}{\bar{u}_1 - 1}\right)\right\}, \tag{23}$$

where R_x is a sort of a shock wave Reynolds number. Since the dimensionless approach velocity $\bar{u}_1$ is a function of the approach Mach number, this expression defines the curves of R_x versus $\bar{u}$ for various values of M_1. This relation is shown in Fig. 1. It is of interest to note that this solution for the velocity distribution through a shock wave considering both heat transfer and viscosity for $\sigma = 0.75$ is almost identical with the corresponding solution (see [9], p. 651) with no heat transfer ($\sigma = \infty$). For $\sigma = \infty$ the constant factor γ in the numerator of Eq. (23) is deleted; thus, the effect of heat transfer increases the shock wave thickness by the ratio $\gamma : 1$.

The shock wave thickness resulting from this computation is, of course, indefinite in the sense that $\bar{u}$ approaches $\bar{u}_1$ and $\bar{u}_2$ asymptotically on the two sides of the shock wave. However an arbitrary measure of the thickness of the region within which the viscosity effects are important may be defined as

$$\delta = + \frac{u_1 - u_2}{(-du/dx)_*}. \tag{24}$$

For the case that μ is constant, $(du/dx)_*$ is the greatest negative velocity gradient; if μ is not constant, it is the velocity gradient at the point of maximum axial viscous stress. Even in this latter case Eq. (24) is still a reasonable index of shock wave thickness. By Eq. (21) the above equation becomes

$$\frac{\rho_* u_* \delta}{\mu_*} = \frac{8\gamma}{3(\gamma + 1)} \left(\frac{u_1 + u_*}{u_1 - u_*}\right). \tag{25}$$

As an example, consider a weak shock wave in air at normal atmospheric conditions with $u_1 = 1.05\, u_*$, $\mu_*/\rho_* = 1/7$ cm^2/sec., $\gamma = 1.400$ and $u_* = 30{,}000$ cm/sec. Then

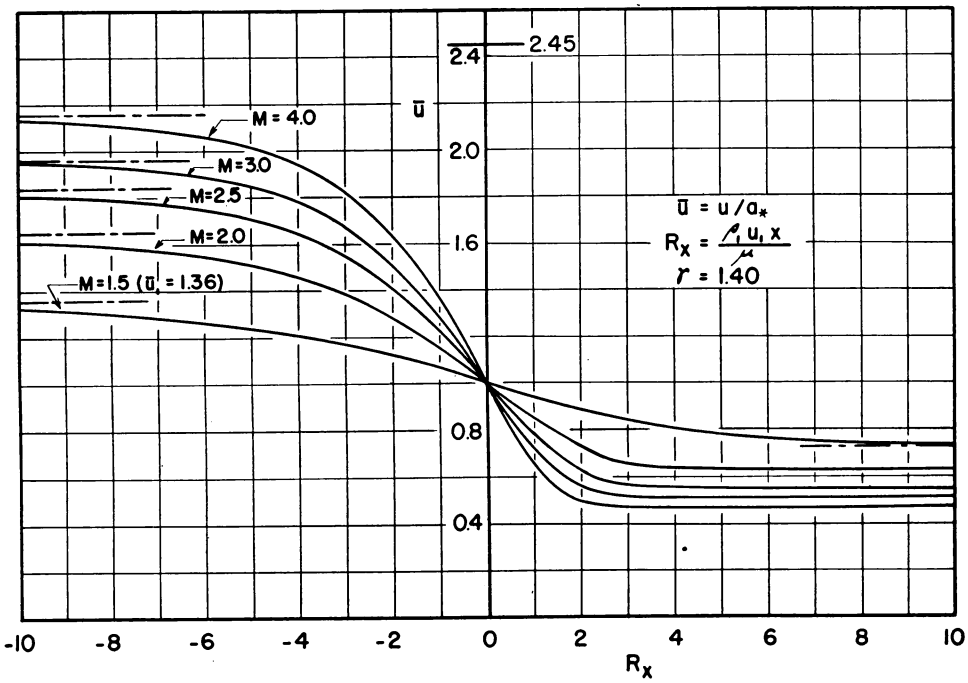

FIG. 1

$\delta = 3.0 \times 10^{-4}$ cm. This value is very close to Taylor's estimate [1]. It is also known from the simple shock wave theory that $\bar{u}_1$ can never exceed the value for $M_1 = \infty$, $\bar{u}_{1\max} = [(\gamma + 1)(\gamma - 1)]^{1/2} = 2.45$, approximately. In this case

$$\frac{\rho_* u_* \delta}{\mu_*} = 3.70. \tag{26}$$

This result can easily be interpreted in terms of the kinetic theory of gases. In the simple kinetic theory, $\mu = (1/2)\rho\bar{c}l$, where $\bar{c}$ is the average molecular velocity and l is the mean free path. For a Maxwellian velocity distribution, $\bar{c} = 0.921\ (3RT)^{1/2}$; so for $\gamma = 1.40$,

$$\frac{\rho_* u_* \delta}{\mu_*} = 1.48\, \frac{\delta}{l_*}. \tag{27}$$

The shock wave thickness for $\bar{u}_1 = 1.05$ ($M_1 = 1.05$) is thus 43 mean free paths, for $\bar{u}_1 = 1.96$ ($M_1 = 3$) it is 3.2 mean free paths, and even for $\bar{u}_1 = 2.45$ ($M_1 = \infty$) the thick-

ness is 2.5 mean free paths. A more satisfactory measure of the usefulness of this continuum theory is the number of molecular collisions during the time of transit through the shock wave. Since the mean molecular speed is approximately equal to the speed of sound, the number of collisions is approximately equal to the width, in mean free paths, divided by the Mach number. Since $M = 1$ at $u = u_*$, the shock wave thickness as computed above may also be interpreted, roughly, as the number of collisions. The interpretation given here differs from those given previously in that conditions within the shock wave are used to estimate the mean free path.

The problem of rate of approach to thermodynamic equilibrium in a shock wave has been discussed by Bethe and Teller [6]. They conclude that equilibrium for the translational and rotational degrees of freedom is attained very rapidly; probably in one or a very few molecular collisions. On the other hand, equilibrium with respect to vibrational modes and dissociation may require from 20 to many thousand collisions. For air, with low stagnation temperatures, such as would exist in a supersonic wind tunnel, the energy content of the vibrational degrees of freedom is almost negligible. Consequently it appears that the continuum theory for the thermodynamic changes in a shock wave should be a good approximation, since it may be in error by at most a few mean free paths, or at most a factor of 2 in the estimated thickness of a shock wave at high Mach numbers. If the stagnation temperature is high, much larger errors may be expected, since the energy associated with molecular vibration and dissociation may be important.

If the effect of variations in the physical parameters is considered, there are two cases which are important. The first is the case in which the variation of C_P is neglected but the variation of μ is considered. This case applies in supersonic wind tunnels since the stagnation temperatures are relatively low, being only a small amount above normal atmospheric temperatures in most cases. For this case Eqs. (19) and (21) still apply. The integrated form, Eq. (23), is no longer correct since μ was considered constant in the integration; Eq. (25) is still correct, however, provided the value of μ at $u = u_*$ is used. This result was implied in the kinetic theory interpretation. It may be noted that, according to the simple kinetic theory used above, the viscosity coefficient varies as $T^{1/2}$. The actual variation is somewhat more.

If both μ and C_P are variable with temperature then Eqs. (8) and (24) give

$$\frac{\rho_* u_* \delta}{\mu_*} = \frac{4}{3} \frac{u_1(u_1 - u_2)u_*}{u_1^2 + RT_1 - u_1(\gamma_* + 1)RT_*}. \tag{28}$$

In general, the shock wave equations (9) and (14) must be treated numerically in order to determine u_2, u_* and T_* for given values of u_1 and T_1.

References

1. G. I. Taylor, "The mechanics of compressible fluids", in Durand's *Aerodynamic theory*, vol. 3, Durand Reprinting Committee, Cal. Inst. Tech., 1943, p. 217.

2. H. W. Liepmann and A. E. Puckett, *Introduction to aerodynamics of a compressible fluid*, Wiley and Sons, New York, 1947, p. 39.

3. Rayleigh, *Aerial plane waves of finite amplitude*, Proc. Roy. Soc. London (A) **84**, 247 (1910).

4. R. Becker, *Stosswelle und Detonation*, Z. Phys. **8**, 321-362 (1922).

5. L. H. Thomas, *Note on Becker's theory of the shock front*, J. Chem. Phys. **12**, 449 (1944).

6. H. A. Bethe and E. Teller, *Deviations from thermal equilibrium in shock waves*, BRL Rep. No. X 117, Aberdeen Proving Ground, Maryland.

7. S. Goldstein, *Modern developments in fluid dynamics*, vol. 2, Oxford University Press, 1948, p. 606.

8. H. J. Stewart, *The energy equation for a viscous compressible fluid*, Proc. Nat. Acad. Sci. 29, 161 (1942).

9. H. Lamb, *Hydrodynamics*, 6th ed. Cambridge University Press, London, 1932, p. 650.

REMARKS ON THE MOTION OF ANCHOR CHAINS*

By R. GRAN OLSSON (*Institute of Technology, Trondheim, Norway*)

1. Introduction. The problem of the motion along a smooth, inclined plane of an anchor to which the end of a chain is attached (Fig. 1) has been treated in the book of S. Timoshenko and D. H. Young [1].† The equation of motion is, however, given in

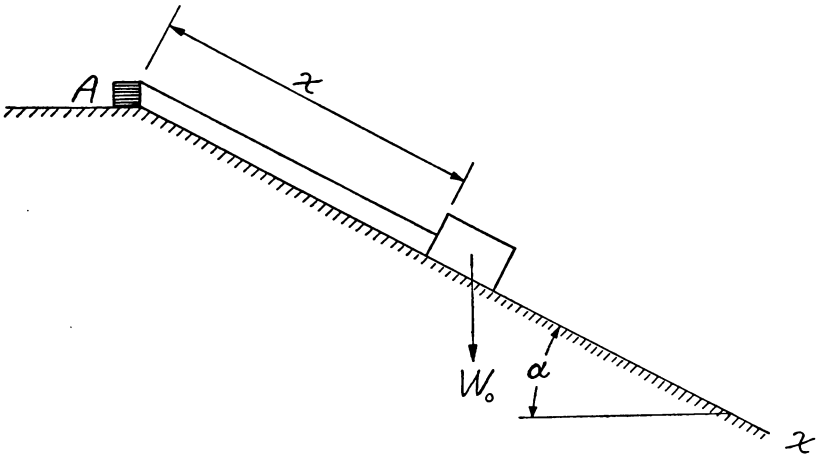

Fig. 1.

such a form that only a relation between the velocity and the displacement is obtained. In this paper it will be shown that very simple relations between the time and the kinematic quantities (displacement, velocity and acceleration) can be stated by introducing the elliptic functions of K. Weierstrass. Very simple expressions for the kinetic quantities (momentum, kinetic and potential energy) can also be established. The motion is assumed to be frictionless, but it is not difficult to take into account a dissipative force, which is either constant or proportional to the moving mass.

2. Nomenclature. In this paper the same notations as those of Timoshenko and Young will be used: a = acceleration of the weight W_0 [cm sec^{-2}]; B = rectilinear momentum [g sec]; C = constant of integration; g = acceleration of gravity [cm sec^{-2}]; m = mass of the system in motion [g cm^{-1} sec^2]; P = force [g]; q = weight per unit length of the chain [g cm^{-1}]; Q = loss of energy by percussion [g cm]; t = time [sec]; T = kinetic energy [g cm]; u = parameter of the elliptic functions; v = velocity [cm sec^{-1}]; V =

*Received May 2, 1949.

†Numbers in square brackets refer to the bibliography at the end of this note.