QUARTERLY OF APPLIED MATHEMATICS

VOLUME LVII DECEMBER · 1999 NUMBER 4

DECEMBER 1999, PAGES 601–620

A PARAMETER-EXPANSION METHOD FOR THE SCATTERING OF PLANE WAVES BY AN ELLIPTIC CYLINDRICAL AND A HYPERBOLOIDAL SCATTERER

BY

THOMAS M. ACHO

Department of Mathematics, Vista University, Bloemfontein, Republic of South Africa

Abstract. The scattered wave components of a plane polarized electromagnetic wave by an elliptic cylindrical scatterer are obtained as a parameter expansion of the more exact circular cylindrical obstacle. The scattering potential of a scalar wave by a hyperboloidal scatterer as a parameter expansion of a circular cone is also obtained. The parameter of expansion in both cases is the semi-interfocal distance.

I. General introduction. The magnitude of difficulties encountered in arriving at a mathematical description of diffraction and the more general scattering problem increases with the irregularity and convexity in the shape of the obstacles. Types of approximation vary, but they generally fall into one of three categories, namely:

(i) an approximation valid for some range of parameter(s) involved in the problem, which might be asymptotically exact in some cases (as in [2], [3], [4], and [10]);

(ii) approximation based on some numerical solution of the equation;

(iii) a simplification based on some intuitive insight into the physical nature of the problem. The accuracy of approximations of this type is often not known a priori but depends upon a posteriori experimental justification, [7].

The scattering of waves caused by an obstacle without edges is usually tackled as a typical boundary value problem (b.v.p.). In this paper we shall obtain an asymptotic solution to a b.v.p. for the scattering of plane polarized electromagnetic waves by an elliptic cylindrical obstacle, as well as the asymptotic solution for the scattering potential for the hyperboloidal scatterer.

In Sec. II.B, we shall develop and use a parameter-expansion method to obtain the reduced wave equation for the elliptic cylindrical scatterer as a sum of that of a circular cylinder and a parameter-dependent term. The asymptotic solution for the scattering of a plane polarized electromagnetic wave by an elliptic cylindrical scatterer, as the sum of that of the circular cylinder and a perturbation term, is then presented in Sec. II.C. In

Received June 9, 1992.

1991 *Mathematics Subject Classification.* Primary 35J05, 35P25.

Sec. III, the reduced wave equation for the hyperboloidal scatterer is expressed as a sum of that of a cone and a perturbation term. The asymptotic solution is then obtained. The advantages of this method are presented by way of a comparison study of shape approximation methods in Sec. IV.

II. Scattering of a plane polarized electromagnetic wave by an elliptic cylindrical scatterer—a parameter-expansion approach.

II.A. *Problem formulation.* The elliptic cylindrical coordinates (μ, ν, z) are related to the Cartesian coordinates by

$$\begin{aligned} x &= l \cosh \mu \cos \nu, \\ y &= l \sinh \mu \sin \nu, \\ z &= z, \end{aligned} \tag{2.1}$$

$$0 \le \mu < \infty, \quad 0 \le \nu \le 2\pi, \quad -\infty < z < \infty,$$

where l is the semi-interfocal distance, $(\cosh \mu)^{-1}$ is the eccentricity, $2l \cosh \mu$ is the major axis, and $2l(\cosh^2 \mu - 1)^{1/2}$ is the minor axis of the elliptic cross section of the scattering body with surface $\mu = \mu_1$. We take the primary source to be a plane wave whose direction of propagation is perpendicular to the z-axis and forms an angle θ_0 with the negative x-axis. We shall assume that the coordinates x_0, y_0 of the source are nonnegative so that $0 \le \theta_0 \le \frac{\pi}{2}$. The geometry of the elliptic cylindrical scatterer would be as in Fig. 1, and the cross section in a plane $z =$ constant would be as in Fig. 3.

Just as the elliptic cylinder is generated by the translation along the z-axis, $-\infty < z < \infty$, of an ellipse in the (x, y)-plane, so is the circular cylindrical scatterer generated by a translation along the z-axis of a circle in the (x, y)-plane. The circular cylindrical coordinates from which the elliptic cylinder departs infinitesimally are related to the Cartesian coordinates by

$$\begin{aligned} x &= \rho \cos \theta, \\ y &= \rho \sin \theta, \\ z &= z, \end{aligned} \tag{2.2}$$

$$0 \le \rho < \infty, \quad 0 \le \theta \le 2\pi, \quad -\infty < z < \infty.$$

The circular cylindrical scatterer whose geometry is in Fig. 2 has as its surface $\rho = \rho_0$. As usual we let the primary source make an angle of θ_0 with the negative x-axis.

We now state our b.v.p. for the elliptic cylindrical scatterer as follows:

$$(\nabla_e^2 + k^2) E_{ez}^s = 0, \qquad (\nabla_e^2 + k^2) H_{ez}^s = 0; \tag{2.3a}$$

$$E_{ez}^s + E_{ez}^i = 0 \quad \text{or} \quad H_{ez}^s + H_{ez}^i = 0 \tag{2.3b}$$

where $E_{ez}^s (H_{ez}^s)$ is the scattered z-polarized electric (magnetic) field component of the electromagnetic wave. The superscript s as in (2.3) stands for scattered and i stands for incident. The subscript e indicates the elliptic scatterer and c shall replace e when such wave functions are for the circular cylindrical scatterer. For simplicity of expressions we shall omit the subscript z which stands for the z-plane polarization so that these

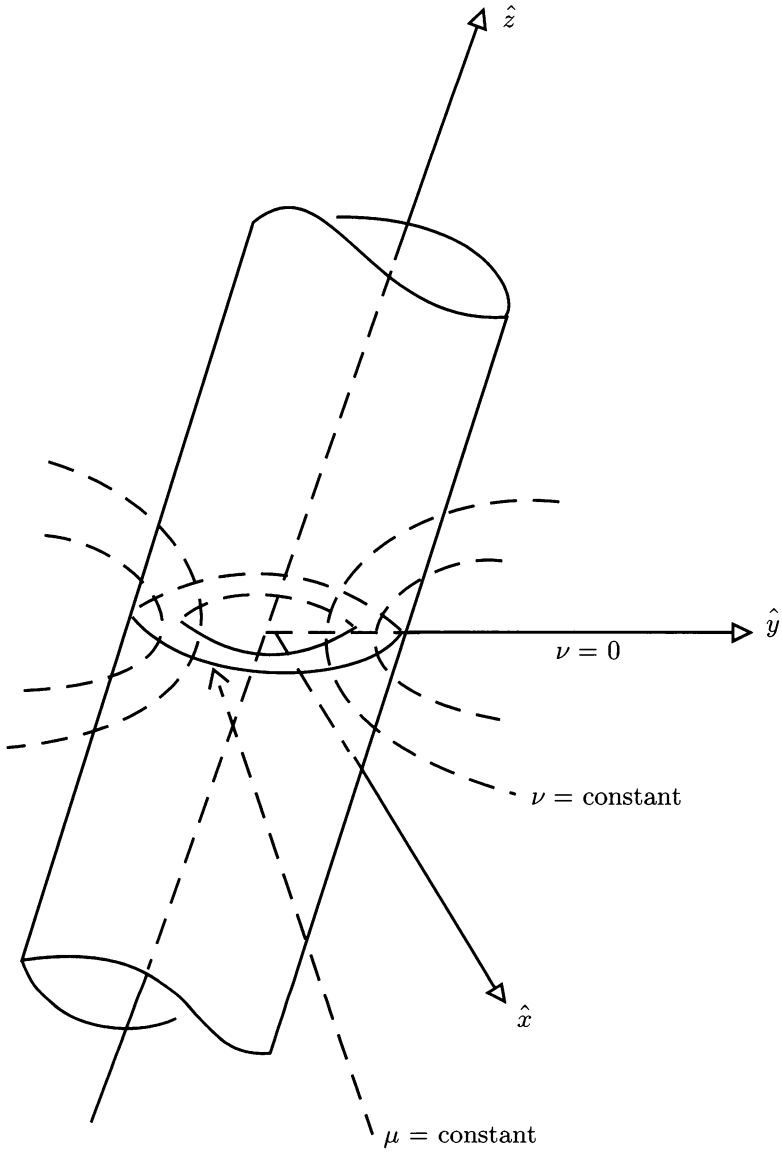

FIG. 1. The elliptic cylindrical scatterer

functions will be assumed throughout this paper to be z-plane polarized. In (2.3a), if E^s_{ez} is used, then the first boundary condition in (2.3b) is applicable. The Laplacian for the circular cylindrical scatterer may be written as

$$\nabla_c^2 \begin{Bmatrix} E_c^s \\ H_c^2 \end{Bmatrix} = \left(\frac{1}{\rho}\frac{\partial}{\partial \rho} + \frac{\partial^2}{\partial \rho^2} + \frac{1}{\rho^2}\frac{\partial^2}{\partial \theta^2} + \frac{\partial^2}{\partial z^2} \right) \begin{Bmatrix} E_c^s \\ H_c^s \end{Bmatrix} \tag{2.4a}$$

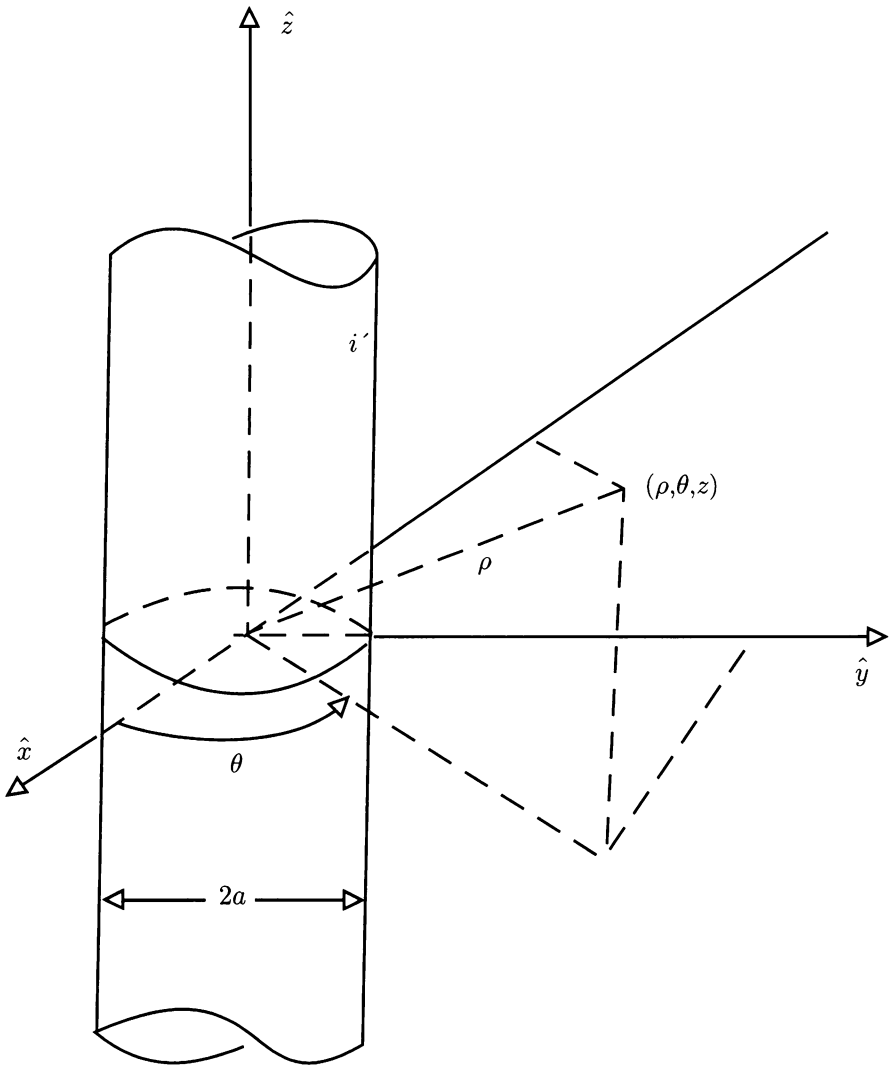

FIG. 2. The circular cylindrical scatterer

and that for the elliptic cylindrical scatterer as

$$\nabla_e^2 \begin{Bmatrix} E_e^s \\ H_e^2 \end{Bmatrix} = \left(\frac{1}{l^2(\cosh^2 \mu - \cos^2 \nu)} \left(\frac{\partial^2}{\partial \mu^2} + \frac{\partial^2}{\partial \nu^2} \right) + \frac{\partial^2}{\partial z^2} \right) \begin{Bmatrix} E_e^s \\ H_e^s \end{Bmatrix}. \tag{2.4b}$$

The parameter-expansion method requires that the reduced wave equation (2.3a) be transformed such that

$$(\nabla_e^2 + k^2) \begin{Bmatrix} E_e^s \\ H_e^s \end{Bmatrix} = (\nabla_c^2 + k^2 + \varepsilon^2 L_\varepsilon) \begin{Bmatrix} E_e^s \\ H_e^s \end{Bmatrix} = 0, \tag{2.5}$$

and the asymptotic solution be obtained in the form

$$\left.\begin{matrix} E_e^s \\ H_e^s \end{matrix}\right\} \sim \sum_{q=0}^{\infty} \varepsilon^{2q} Q_{2q}(\rho, \theta, z), \tag{2.6}$$

where ε is a parameter and $Q_{2q}(\rho, \theta, z)$ is to be determined. It turns out that $Q_0 = E_c^s$ (or H_c^s), which is consistent with the fact that the asymptotic solution should be such that when $\varepsilon \to 0$, then

$$\left.\begin{matrix} E_e^s \\ H_e^s \end{matrix}\right\} \to \left.\begin{matrix} E_c^s \\ H_c^s \end{matrix}\right\}.$$

In the preceding sections we shall solve the b.v.p. for the magnetic field component of the z-polarized electromagnetic wave. The same procedure, with H^s replaced by E^s, will yield results for E^s. For the circular cylindrical scatterer, E_c^s and H_c^s are given in [2] in terms of cylindrical Bessel functions as

$$E_c^s = -\sum_{n=0}^{\infty} \varepsilon_n (+i)^n \frac{J_n(ka)}{H_n^{(1)}(ka)} - H_n^{(1)}(k\rho) \cos n\theta \tag{2.7}$$

and

$$H_c^s = \sum_{n=0}^{\infty} \varepsilon_n (-i)^n \frac{J_n(ka)}{H_n^{(1)}(ka)} H_n^{(1)}(k\rho) \cos n\theta \tag{2.8}$$

where $J_n(\cdot), H_n^{(1)}(\cdot)$ are the Bessel functions of the first and third kind, respectively, and ε_n is the Neumann symbol. The incident wave is given by

$$E^i = \exp\{-ik(Z \cos\theta_0 + X \sin\theta_0)\} \tag{2.9}$$

and

$$H^i = (x \sin\theta_0 - y \cos\theta_0) \exp\{-ik(x \cos\theta_0 + y \sin\theta_0)\}. \tag{2.10}$$

II.B. *Coordinate transformation and the transformation of the reduced wave equation.* The pièce de résistance for the parameter-expansion method would be a suitable parameter ε for the expansion and a transformation relating the elliptic coordinates to the circular coordinates such that

$$\begin{aligned} \mu &= \mu(\rho, \theta, z; \varepsilon), \\ \nu &= \nu(\rho, \theta, z; \varepsilon), \\ z &= z, \end{aligned} \tag{2.11}$$

where ε is a parameter.

The equation of the elliptic cross section in rectangular coordinates (see Fig. 3b) is

$$\frac{x^2}{a^2} + \frac{y^2}{a^2\left(1 - \frac{l^2}{a^2}\right)} = 1$$

where l is the semi-interfocal distance. This ellipse collapses into a circle of radius a as $\frac{l}{a} \to 0$ for μ large. So our suitable parameter would be $\varepsilon = \frac{l}{a}$. Thus the elliptic cylinder tends to a circular cylinder in the limit as $\varepsilon \to 0$ (for μ large).

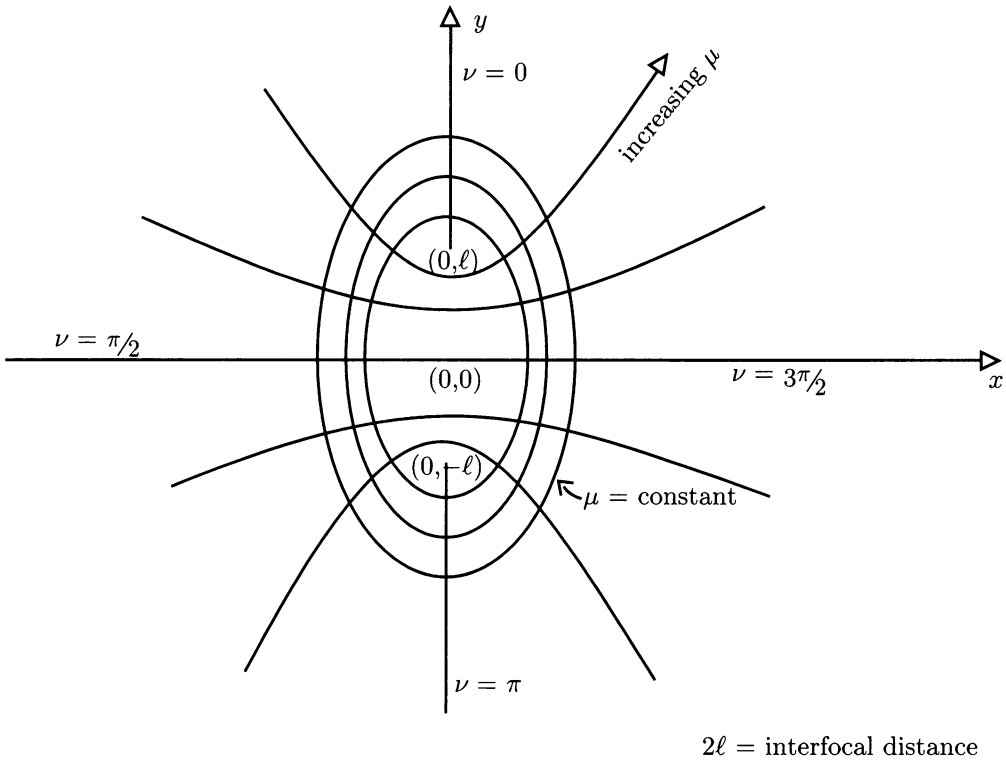

FIG. 3a. Confocal ellipse

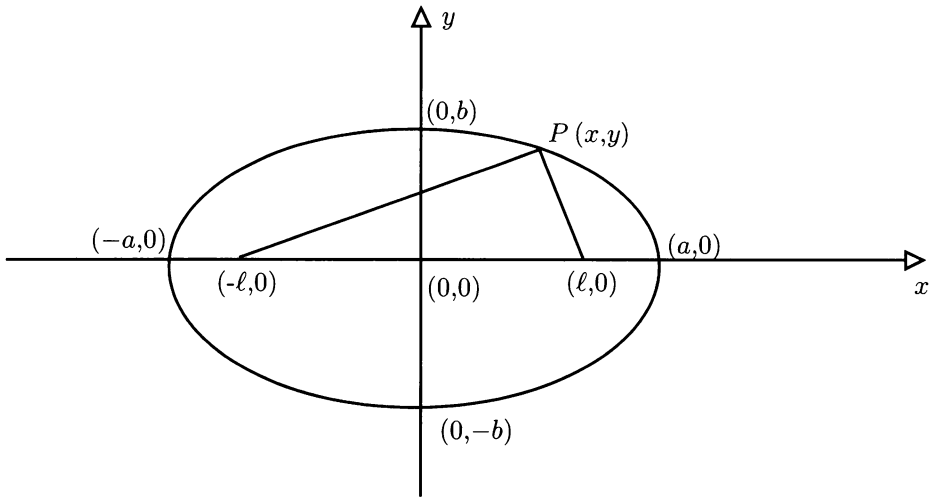

FIG. 3b. An elliptic cross section in the Cartesian plane

The elliptic cross section of the cylinder in Fig. 1 makes the transformation task a lot easier. From (2.1) and (2.2) we get

$$\begin{aligned} l\cosh\mu\cos\nu &= \rho\cos\theta, \\ l\sinh\mu\sin\nu &= \rho\sin\theta. \end{aligned} \tag{2.12}$$

Looking at the dominant terms for $\mu \gg 1$ (which is one of the conditions for the approximating ellipse collapsing into a circle), we have

$$\begin{aligned} \tfrac{l}{2}e^{\mu} + O(1) &= \rho, \\ \nu + O(e^{-2\mu}) &= \theta. \end{aligned} \tag{2.13}$$

Now let

$$e^{\mu} = \tfrac{1}{\varepsilon}f_{-1}(\rho,\theta) + f_0(\rho,\theta) + \varepsilon f_1(\rho,\theta) + \varepsilon^2 f_2(\rho,\theta) + \cdots, \tag{2.14}$$

$$\nu = g_0(\rho,\theta) + \varepsilon g_1(\rho,\theta) + \varepsilon^2 g_2(\rho,\theta) + \varepsilon^3 g_3(\rho,\theta) + \cdots, \tag{2.15}$$

where ε is the small parameter $\frac{l}{a}$. This gives

$$e^{-\mu} = \frac{\varepsilon}{f_{-1}} - \frac{\varepsilon^2 f_0}{f_{-1}^2} - \frac{\varepsilon^3 f_1}{f_{-1}^2} - \cdots, \tag{2.14†}$$

from whence we obtain

$$\begin{aligned} \cosh\mu &= \frac{1}{2}f_{-1}\frac{1}{\varepsilon} + \frac{1}{2}f_0 + \frac{1}{2}\left(\frac{1}{f_{-1}} + f_1\right)\varepsilon + \cdots, \\ \sinh\mu &= \frac{1}{2}f_{-1}\frac{1}{\varepsilon} + \frac{1}{2}f_0 + \frac{1}{2}\left(f_1 - \frac{1}{f_{-1}}\right)\varepsilon + \cdots, \end{aligned}$$

$$\begin{aligned} \cos\nu &= \cos g_0 + \varepsilon g_1 \sin g_0 + \varepsilon^2\left(-\frac{g_1^2}{2}\cos g_0 - g_2\sin g_0\right) + \cdots, \\ \sin\nu &= \sin g_0 + \varepsilon g_1\cos g_0 + \varepsilon^2\left(-\frac{g_1^2}{2}\sin g_0 + g_2\cos g_0\right) + \cdots. \end{aligned} \tag{2.16}$$

Substitution of (2.14) into (2.11) gives

$$\begin{aligned} &a\varepsilon\left[\frac{1}{2}f_{-1}\frac{1}{\varepsilon} + \frac{1}{2}f_0 + \frac{1}{2}\left(\frac{1}{f_{-1}} + f_1\right)\varepsilon + \cdots\right] \\ &\quad\times\left[\cos g_0 + \varepsilon g_1\sin g_0 + \varepsilon^2\left(-\frac{g_1^2}{2}\cos g_0 - g_2\sin g_0\right) + \cdots\right] = \rho\cos\theta, \end{aligned} \tag{2.17a}$$

$$\begin{aligned} &a\varepsilon\left[\frac{1}{2}f_{-1}\frac{1}{\varepsilon} + \frac{1}{2}f_0 + \frac{1}{2}\left(f_1 + \frac{1}{f_{-1}}\right)\varepsilon + \cdots\right] \\ &\quad\times\left[\sin g_0 + \varepsilon g_1\cos g_0 + \varepsilon^2\left(-\frac{g_1^2}{2}\sin g_0 - g_2\cos g_0\right) + \cdots\right] = \rho\sin\theta. \end{aligned} \tag{2.17b}$$

It follows that for

$$\begin{aligned} O(1):\ &\tfrac{1}{2}af_{-1}\cos g_0 = \rho\cos\theta, \\ &\tfrac{1}{2}af_{-1}\sin g_0 = \rho\sin\theta \\ &\Rightarrow g_0 = \theta,\ f_{-1} = \frac{2}{a}\rho; \end{aligned} \tag{2.18a}$$

$$
\begin{aligned}
O(\varepsilon): & \tfrac{1}{2} a f_0 \cos\theta - \rho g_1 \sin\theta = 0, \\
& \tfrac{1}{2} a f_0 \sin\theta + \rho g_1 \cos\theta = 0 \\
& \Rightarrow f_0 = 0,\ g_1 = 0;
\end{aligned} \tag{2.18b}
$$

$$
\begin{aligned}
O(\varepsilon^2): & -\rho\cos\theta \cdot g_2 + \frac{a}{2} f_1 \cos\theta = -\frac{a^2}{4\rho}\cos\theta, \\
& \rho\cos\theta \cdot g_2 + \frac{a}{2} f_1 \sin\theta = \frac{a^2}{4\rho}\sin\theta, \\
& \Rightarrow f_1 = \frac{a}{2\rho}\cos 2\theta,\ g_2 = \left(\frac{a}{2\rho}\right)^2 \sin 2\theta;
\end{aligned} \tag{2.18c}
$$

$$
\begin{aligned}
O(\varepsilon^3): & \frac{a}{2} f_2 \cos\theta - \rho g_3 \sin\theta = 0, \\
& \frac{a}{2} f_2 \sin\theta + \rho g_3 \cos\theta = 0, \\
& \Rightarrow f_2 = 0,\ g_3 = 0;
\end{aligned} \tag{2.18d}
$$

and on substitution of (2.18) into (2.14) and (2.15), we obtain the elliptic cylindrical coordinates explicitly in terms of the circular cylindrical coordinates as

$$
\begin{aligned}
e^\mu &= \frac{2\rho}{a}\cdot\frac{1}{\varepsilon} - \frac{2\rho}{a}\cos 2\theta \cdot \varepsilon + O(\varepsilon^3), \\
\nu &= \theta + \left(\frac{a}{2\rho}\right)^2 \sin 2\theta \cdot \varepsilon^2 + O(\varepsilon^4), \\
z &= z.
\end{aligned} \tag{2.19}
$$

The Jacobian of the transformation of the dependent variable E_e^s (or H_e^s) for $\rho \neq 0$ would be

$$
J = \frac{\partial(\mu,\nu,z)}{\partial(\rho,\theta,z)} = \begin{vmatrix} \frac{1}{\rho}\{1 + O(\varepsilon^4)\} & -2\sin 2\theta \cdot \varepsilon^2 + O(\varepsilon^4) & 0 \\ -\frac{a}{2\rho^3}\sin 2\theta \cdot \varepsilon^2 + O(\varepsilon^4) & 1 + 2\left(\frac{a}{2\rho}\right)^2 \cos 2\theta \cdot \varepsilon^2 + O(\varepsilon^4) & 0 \\ 0 & 0 & 1 \end{vmatrix}
$$

or

$$
J = \frac{1}{\rho}\left\{1 + 2\left(\frac{a}{2\rho}\right)^2 \cos 2\theta \cdot \varepsilon^2 + O(\varepsilon^4)\right\}; \tag{2.20}
$$

that is, the dependent variable may be transformed thus:

$$
H_e^s = J^\alpha H_{e*}^s \tag{2.21}
$$

where α is to be determined, and H_{e*}^s is the transformed dependent variable. However, on substitution of (2.21) into the reduced wave equation (2.3a) with the requirement that as $\varepsilon \to 0$ the Helmholtz equation for the circular cylindrical scatterer should be retrieved, we find that this is achieved if $\alpha \equiv 0$, that is, the dependent variable is invariant under this transformation. This is, in fact, consistent with the geometrical theory of wave propagation.

We shall now transform the reduced wave equation (2.3a) taking into cognizance (2.4b). To do this we need the following which may be obtained from (2.19):

$$\begin{aligned}
\frac{\partial\rho}{\partial\mu} &= \rho\left\{1 - 2\left(\frac{a}{\rho}\right)^2 \cos 2\theta \cdot \varepsilon^2 + O(\varepsilon^4)\right\},\\
\frac{\partial\theta}{\partial\mu} &= \frac{1}{2}\left(\frac{a}{\rho}\right)^2 \sin 2\theta \cdot \varepsilon^2 + O(\varepsilon^4),\\
\frac{\partial\rho}{\partial\nu} &= -\frac{a^2}{2\rho}\sin 2\theta \cdot \varepsilon^2 + O(\varepsilon^4),\\
\frac{\partial\theta}{\partial\nu} &= 1 - 2\left(\frac{a}{2\rho}\right)^2 \cos 2\theta + O(\varepsilon^4),
\end{aligned} \tag{2.22}$$

and

$$\begin{aligned}
\frac{\partial^2\rho}{\partial\mu^2} &= \rho\left\{1 - \left(\frac{a}{\rho}\right)^2 \cos 2\theta \cdot \varepsilon^2 + O(\varepsilon^4)\right\},\\
\frac{\partial^2\rho}{\partial\nu^2} &= -\left(\frac{a}{\rho}\right)^2 \cos 2\theta \cdot \varepsilon^2 + O(\varepsilon^4),\\
\frac{\partial^2\theta}{\partial\mu^2} &= -\left(\frac{a}{\rho}\right)^2 \sin 2\theta \cdot \varepsilon^2 + O(\varepsilon^4),\\
\frac{\partial^2\theta}{\partial\nu^2} &= \left(\frac{a}{\rho}\right)^2 \sin 2\theta \cdot \varepsilon^2 + O(\varepsilon^4).
\end{aligned} \tag{2.23}$$

We also require the relation

$$\begin{aligned}
\frac{\partial^2 H_e^s}{\partial\tau_i^2} = \frac{\partial^2 H_e^s}{\partial\rho^2}\cdot\left(\frac{\partial\rho}{\partial\tau_i}\right)^2 + 2\frac{\partial^2 H_e^s}{\partial\rho\,\partial\theta}\cdot\frac{\partial\rho}{\partial\tau_i}\frac{\partial\theta}{\partial\tau_i} + \frac{\partial^2 H_e^s}{\partial\theta^2}\cdot\left(\frac{\partial\theta}{\partial\tau_i}\right)^2\\
+ \frac{\partial H_e^s}{\partial\rho}\cdot\frac{\partial^2\rho}{\partial\tau_i^2} + \frac{\partial H_e^s}{\partial\theta}\cdot\frac{\partial^2\theta}{\partial\tau_i^2},
\end{aligned} \tag{2.24}$$

where $i = 1, 2$; $\tau_1 = \mu$; $\tau_2 = \nu$.

Also, on using (2.16) in conjunction with (2.19), we obtain

$$l^2(\cosh^2\mu - \cos^2\nu) = \rho^2\left\{1 - \left(\frac{a}{\rho}\right)^2 \cos 2\theta \cdot \varepsilon^2 + O(\varepsilon^4)\right\}. \tag{2.25}$$

From (2.24) we have

$$\frac{\partial^2 H_e^s}{\partial\nu^2} = \frac{\partial^2 H_e^s}{\partial\theta^2} + \left(\frac{a}{\rho}\right)^2\left\{\sin 2\theta\frac{\partial H_e^s}{\partial\theta} - \cos 2\theta\frac{\partial^2 H_e^s}{\partial\theta^2} - \cos 2\theta\frac{\partial H_e^s}{\partial\rho}\right\}\varepsilon^2 + O(\varepsilon^4), \tag{2.26a}$$

$$\begin{aligned}
\frac{\partial^2 H_e^s}{\partial\mu^2} = \left\{\rho^2\frac{\partial^2 H_e^s}{\partial\rho^2} + \rho\frac{\partial H_e^s}{\partial\rho}\right\} + \left(\frac{a}{\rho}\right)^2\\
\times\left\{-\rho\cos 2\theta\frac{\partial H_e^s}{\partial\rho} - \sin 2\theta\frac{\partial H_e^s}{\partial\theta} + \rho\sin 2\theta\frac{\partial^2 H_e^s}{\partial\rho\,\partial\theta} - \rho^2\cos 2\theta\frac{\partial^2 H_e^s}{\partial\rho^2}\right\}\varepsilon^2 + O(\varepsilon^4),
\end{aligned} \tag{2.26b}$$

so that the reduced wave equation (2.3a) for the magnetic field component H_e^s becomes

$$(\nabla_e^2 + k^2)H_e^s = \left\{1 - \left(\frac{a}{\rho}\right)^2 \cos 2\theta \cdot \varepsilon^2 + O(\varepsilon^4)\right\}^{-1} \left(\left\{\frac{\partial^2 H_e^s}{\partial \rho^2} + \frac{1}{\rho}\frac{\partial H_e^s}{\partial \rho} + \frac{1}{\rho^2}\frac{\partial^2 H_e^s}{\partial \theta^2}\right\}\right.$$
$$+ \left(\frac{a}{\rho}\right)^2 \left\{-\frac{\cos 2\theta}{\rho^2}\frac{\partial^2 H_e^s}{\partial \theta^2} - \frac{\cos 2\theta}{\rho^2}\frac{\partial H_e^s}{\partial \rho} - \cos 2\theta \frac{\partial H_e^s}{\partial \rho} + \frac{\sin 2\theta}{\rho}\frac{\partial^2 H_e^s}{\partial \rho \partial \theta}\right.$$
$$\left.\left. - \cos 2\theta \frac{\partial^2 H_e^s}{\partial \rho^2}\right\}\varepsilon^2 + O(\varepsilon^4)\right) + \frac{\partial^2 H_e^s}{\partial z^2} + k^2 = 0; \tag{2.27}$$

that is,

$$(\nabla_e^2 + k^2)H_e^s = (\nabla_c^2 + k^2 + \varepsilon^2 L_\varepsilon)H_e^s = 0, \tag{2.28}$$

where ∇_c^2 is the Laplacian for the circular cylindrical scatterer as in (2.4a) and L_ε is the operator

$$L_\varepsilon = \left(\frac{a}{\rho}\right)^2 \left\{\frac{\sin 2\theta}{\rho}\frac{\partial^2}{\partial \theta \partial \rho} - \cos 2\theta \left(\frac{(1+\rho)}{\rho^2}\frac{\partial}{\partial \rho} + \frac{1}{\rho^2}\frac{\partial^2}{\partial \theta^2}\right.\right.$$
$$\left.\left. + \frac{\partial^2}{\partial \rho^2} + \frac{\partial^2}{\partial z^2} + k^2\right) + O(\varepsilon^4)\right\}. \tag{2.29}$$

Thus, we retrieve the reduced wave equation for the circular cylindrical scatterer when $\varepsilon = 0$.

II.C. *The asymptotic expansion of the magnetic component, H_e^s, of the scattered field for the elliptic cylindrical scatterer.* The scattered field H_e^s of the elliptic cylindrical scatterer may be expressed as

$$H_e^s \sim \sum_{q=0}^{\infty} \varepsilon^{2q} Q_{2q}(p, \theta, z). \tag{2.30}$$

The motivation for this representation stems from earlier asymptotic expansions for the solutions to the reduced wave equation by Sommerfeld and Rung [9], 1911, and the several modifications thereafter. We may then write (2.28), with H_e^s substituted from (2.30), as

$$(\nabla_c^2 + k^2 + \varepsilon^2 L_\varepsilon) \sum_{q=0}^{\infty} \varepsilon^{2q} Q_{2q}(\rho, \theta, z) = 0 \tag{2.31}$$

or

$$(\nabla_c^2 + k^2 + \varepsilon^2 L_\varepsilon)(Q_0 + \varepsilon^2 Q_2 + \varepsilon^4 Q_4 + \cdots) = 0. \tag{2.32}$$

Imploring the method of regular perturbation at this stage we find that

$$O(1): \qquad (\nabla_c^2 + k^2)Q_0 = 0. \tag{2.33}$$

This is the Helmholtz equation for the circular cylindrical scatterer; so it becomes imperative that

$$Q_0 = H_c^s. \tag{2.34}$$

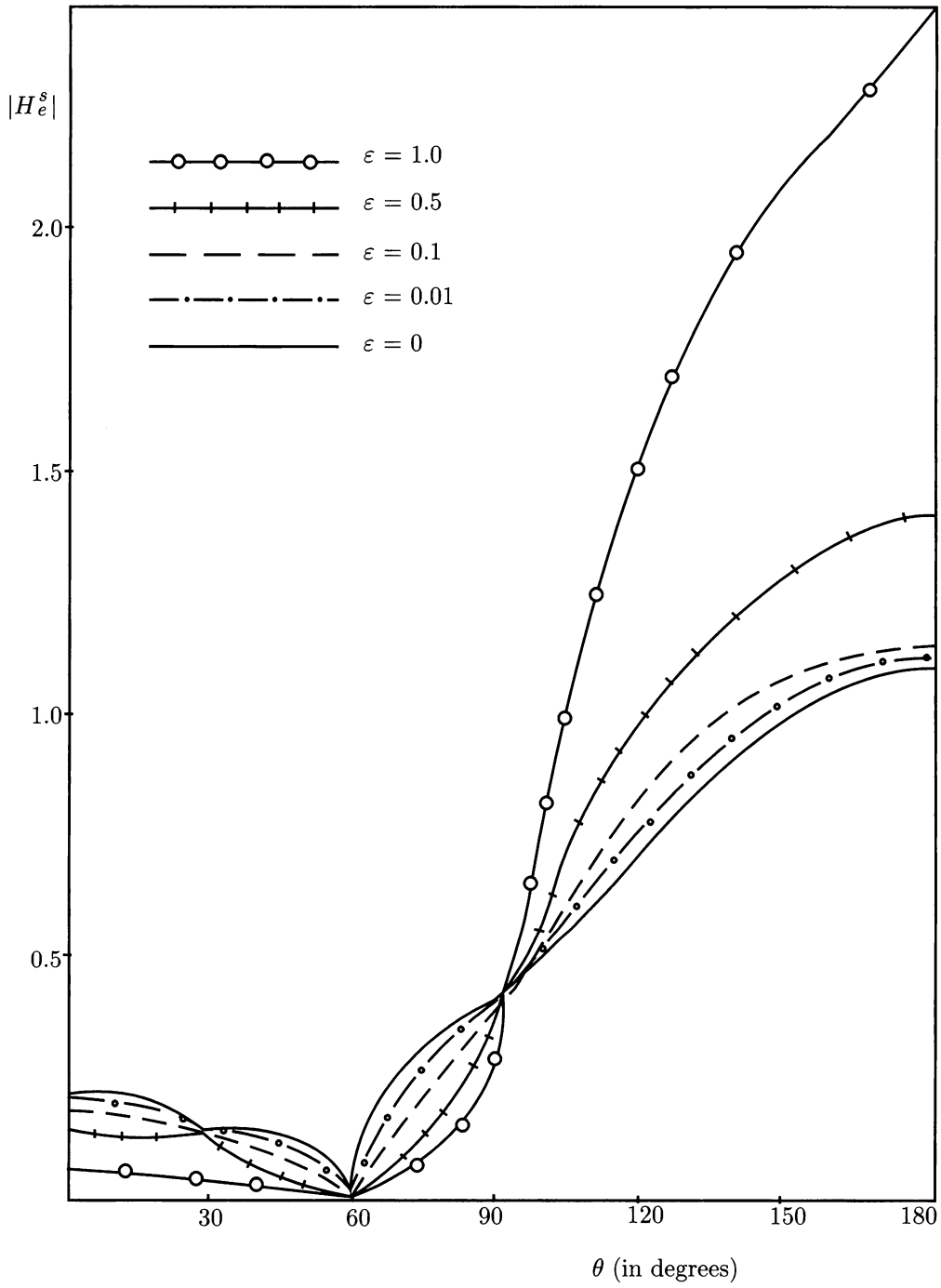

FIG. 4. Graph of $|H_e^s|$ against θ for varying eccentricities; $\varepsilon = 0$ corresponds to $|H_e^s| = |H_c^s|$.

In addition, H_c^s has an exact value given by (2.8)

$$O(\varepsilon^2): \qquad (\nabla_c^2 + k^2)Q_2 = -L_{\varepsilon^0} H_c^s, \tag{2.35}$$

where L_{ε^0} represents terms up to the term of $O(1)$ (i.e., of $O(\varepsilon^0)$) in L_{ε^∞}. Furthermore, in general, we obtain $O(\varepsilon^{2n})$ as

$$(\nabla_c^2 + k^2)Q_{2n} = -\sum_{i=0}^{n-1} L_{\varepsilon^{2i}} Q_2(n-1-i). \tag{2.36}$$

We may then determine Q_{2n} as has been computed, and with the determination of Q_0 as in (2.34) the rest follows. To solve Eq. (2.36) for Q_{2n} we need a suitable Green's function $G(\rho, \theta, z; \rho_0, \theta_0, z_0)$ for the Helmholtz operator in (2.36). The Green's function should satisfy boundary conditions. On the surface $\rho = a$, we have from (2.3b) that

$$H_c^i + \sum_{q=0}^{\infty} \varepsilon^{2q} Q_{2q}(\rho, \theta, z) = 0; \tag{2.37}$$

and for $Q_0 = H_c^s$ we must have that

$$|Q_{2n}|_{\text{surface}} = 0, \quad n = 1, 2, \ldots . \tag{2.38}$$

Also, the Green's function satisfies the radiation condition. Thus, a suitable Green's function for our problem will then be such that

$$\begin{aligned} &(\nabla_c^2 + k^2)G = 0 \quad \text{except at } (\rho_0, \theta_0, z_0); \\ &G \sim \frac{1}{4\pi R}, \quad R \to 0 \text{ where } R = |\rho - \rho_0|; \end{aligned} \tag{2.39}$$

and

$$G \sim \frac{c}{\rho}, \quad \rho \to \infty \text{ (radiation condition)}.$$

Such a Green's function would be as given by Morse and Feshbach [8], p. 888, namely,

$$G = \frac{e^{ikR}}{iR} = \sum_{m=0}^{\infty} (2 - \delta_{0m}) \cos\{m(\theta - \theta_0)\} \int_0^\infty \frac{\tau J_m(\tau\rho) J_m(\tau\rho_0)}{\sqrt{(k^2 - \tau^2)}} \cdot \exp\{i\sqrt{(k^2 - \tau^2)}\}\, d\tau \tag{2.40}$$

so that Q_{2q} becomes

$$Q_{2q}(\rho_0, \theta_0, z_0) = -\int_0^\infty \int_a^\infty \int_0^{2\pi} G(\rho, \theta, z; \rho_0, \theta_0, z_0) \left\{ \sum_{i=0}^{n-1} L_{\varepsilon^{2i}} Q_{2(n-1-i)} \right\} d\theta\, d\rho\, dz. \tag{2.41}$$

Let us compute Q_2 from (2.41). Now, from (2.29) and (2.8) we have

$$\begin{aligned} L_{\varepsilon^0} H_c^s = \left(\frac{a}{\rho}\right)^2 \sum_{n=0}^{\infty} \varepsilon_n (-1)^{n+1} \frac{J_n'(ka)}{H_n^{(1)}(ka)} H_n^{(1)}(k\rho) \cos n\theta \\ \cdot \left\{ -\frac{n \tan n\theta}{\rho H_n^{(1)}(k\rho)} \frac{\partial H_n^{(1)}(k\rho)}{\partial \rho} + \cos 2\theta \left(\frac{(1+\rho)}{\rho^2 H_n^{(1)}(k\rho)} \frac{\partial H_n^{(1)}(k\rho)}{\partial \rho} \right) \right. \\ \left. + \left(k^2 - \frac{n^2}{\rho^2} \right) + \frac{1}{H_n^{(1)}(k\rho)} \frac{\partial \rho^2 H_n^{(1)}(k\rho)}{\partial \rho^2} \right) \Bigg\}, \end{aligned} \tag{2.42a}$$

where

$$\frac{\partial H_n^{(1)}(k\rho)}{\partial \rho} = k H_{n-1}^{(1)}(k\rho) - \frac{n}{\rho} H_n^{(1)}(k\rho) \tag{2.42b}$$

and

$$\frac{\partial^2 H_n^{(1)}(k\rho)}{\partial \rho^2} = k^2 H_{n-2}^{(1)}(k\rho) - \frac{k(2n-1)}{\rho} H_{n-1}^{(1)}(k\rho) + \frac{n^2}{\rho^2} H_n^{(1)}(k\rho) \tag{2.42c}$$

so that

$$\begin{aligned} Q_2 = -\int_0^\infty \int_a^\infty \int_0^{2\pi} \left\{ \sum_{m=0}^{\infty} (2 - \delta_{0m}) \cos\{m(\theta - \theta_0)\} \int_0^\infty \frac{\tau J_m(\tau\rho) J_m(\tau\rho_0)}{\sqrt{(k^2 - \tau^2)}} \right. \\ \left. \cdot \exp\{i\sqrt{(k^2 - \tau^2)}\}\, d\tau \right\} \left\{ \left(\frac{a}{\rho}\right)^2 \sum_{n=0}^{\infty} \varepsilon_n (-i)^{n+1} \frac{J_n'(ka)}{H_n^{(1)}(ka)} H_n^{(1)}(k\rho) \right. \\ \cdot \cos n\theta \left(-\frac{n \tan n\theta}{\rho H_n^{(1)}(k\rho)} \frac{\partial H_n^{(1)}(k\rho)}{\partial \rho} + \cos 2\theta \left(\frac{(1+\rho)}{\rho^2 H_n^{(1)}(k\rho)} \cdot \frac{\partial H_n^{(1)}(k\rho)}{\partial \rho} \right. \right. \\ \left. \left. + \left(k^2 - \frac{n^2}{\rho^2} \right) + \frac{1}{H_n^{(1)}(k\rho)} \frac{\partial^2 H_n^{(1)}(k\rho)}{\partial \rho^2} \right) \right\} d\theta\, d\rho\, dz. \end{aligned} \tag{2.43}$$

$G(\rho, \theta, z; \rho_0, \theta_0, z_0)$ and $L_{\varepsilon^0} H_c^s$ are bounded and finite, so that the integral for Q_2 as in (2.43) is finite and bounded (see [6]). With the computation of subsequent Q_{2n}, for $n > 1$ (to desired accuracy), we obtain the asymptotic expansion of the solution for H_e^s as in (2.30). E_e^s may be obtained by a similar procedure.

III. The scattering potential for a hyperboloid of revolution as a parameter expansion of a circular cone. The hyperboloid is the only semi-infinite (and separable) shape for which there are no exact solutions to the scattering problem. The hyperboloid of revolution degenerates into a circular cone as the semi-interfocal distance tends to zero. See Uslenghi 1969, [2, p. 623]. The hyperboloidal coordinates may be related to the rectangular Cartesian coordinates by

$$\begin{aligned} x &= \tfrac{1}{2} d \sqrt{\{(\xi^2 - 1)(1 - \eta^2)\}} \cos\phi, \\ y &= \tfrac{1}{2} d \sqrt{\{(\xi^2 - 1)(1 - \eta^2)\}} \sin\phi, \\ z &= \tfrac{1}{2}\, d\xi\eta, \end{aligned} \tag{3.1}$$

where

$$1 \leq \xi < \infty, \quad -1 \leq \eta \leq 1 \quad 0 \leq \phi < 2\pi.$$

The relations (3.1) are the same as those for the prolate spheroid as presented by Acho, [10], if we set

$$\xi = \cosh \mu, \quad \eta = \cos \nu, \quad \tfrac{1}{2}d = l;$$

that is,

$$\begin{aligned} x &= l \sinh \mu \sin \nu \cos \phi, \\ y &= l \sinh \mu \sin \nu \sin \phi, \\ z &= l \cosh \mu \cos \nu, \end{aligned} \tag{3.2}$$

$$0 \leq \mu < \infty, \quad 0 \leq \nu < \pi, \quad 0 \leq \phi < 2\pi.$$

This similarity is not coincidental since confocal prolate spheroids of interfocal distance $2l$, major axis $2l \cosh \mu$, and minor axis $2l \sinh \mu$ would be confocal hyperboloids of revolution of two sheets with interfocal distance $2l$ and semi-planes originating in the z-axis. (See Fig. 5.)

Also, the circular cone has coordinates (r, θ, ψ) that are related to the Cartesian coordinates by

$$\begin{aligned} x &= r \sin \theta \cos \psi, \\ y &= r \sin \theta \sin \psi, \\ z &= r \cos \theta, \end{aligned} \tag{3.3}$$

where

$$0 \leq r < \infty, \quad 0 \leq \theta \leq \pi, \quad 0 \leq \psi < 2\pi.$$

Now with an analysis similar to that in [10] we obtain the parameter for our expansion as $\varepsilon = l/\alpha$, where $\alpha = \sqrt{(a^2 + l^2)}$, a being one-half the inter-vertex distance. We then proceed to obtain the reduced wave equation for the hyperboloidal scatterer in terms of the right conical obstacle in the form

$$(\Delta_h + k^2)U_h = [\Delta_c + k^2 + \varepsilon^2 L_{\varepsilon\infty}]U_h, \tag{3.4}$$

where the subscript h indicates hyperboloidal operators and the subscript c that for the circular cone. A repeat of the analysis for the prolate spheroidal scatterer as in [10] (similar derivations for the elliptic cylindrical scatterer have been presented in this paper in Section II.B) yields

$$\begin{aligned} L_{\varepsilon\infty} = \left(\frac{\alpha}{r}\right)^2 \Bigg\{ &-\cos 2\theta \frac{\partial^2 U}{\partial r^2} + \frac{1}{r} \sin 2\theta \frac{\partial^2 U}{\partial r \, \partial \theta} \\ &- \frac{\cos 2\theta}{r^2} \frac{\partial^2 U}{\partial \theta^2} - \frac{3(r+2)}{2r^2} \cos 2\theta \frac{\partial U}{\partial r} \\ &+ \frac{1}{2r^2}(1 + 2\sin 2\theta - 2\cot \theta) \frac{\partial U}{\partial \theta} \\ &+ \frac{1}{r^2}(\operatorname{cosec}^2 \theta - 2) \frac{\partial^2 U}{\partial \phi^2} + k^2 \cos 2\theta \Bigg\} + O(\varepsilon^2). \end{aligned} \tag{3.5}$$

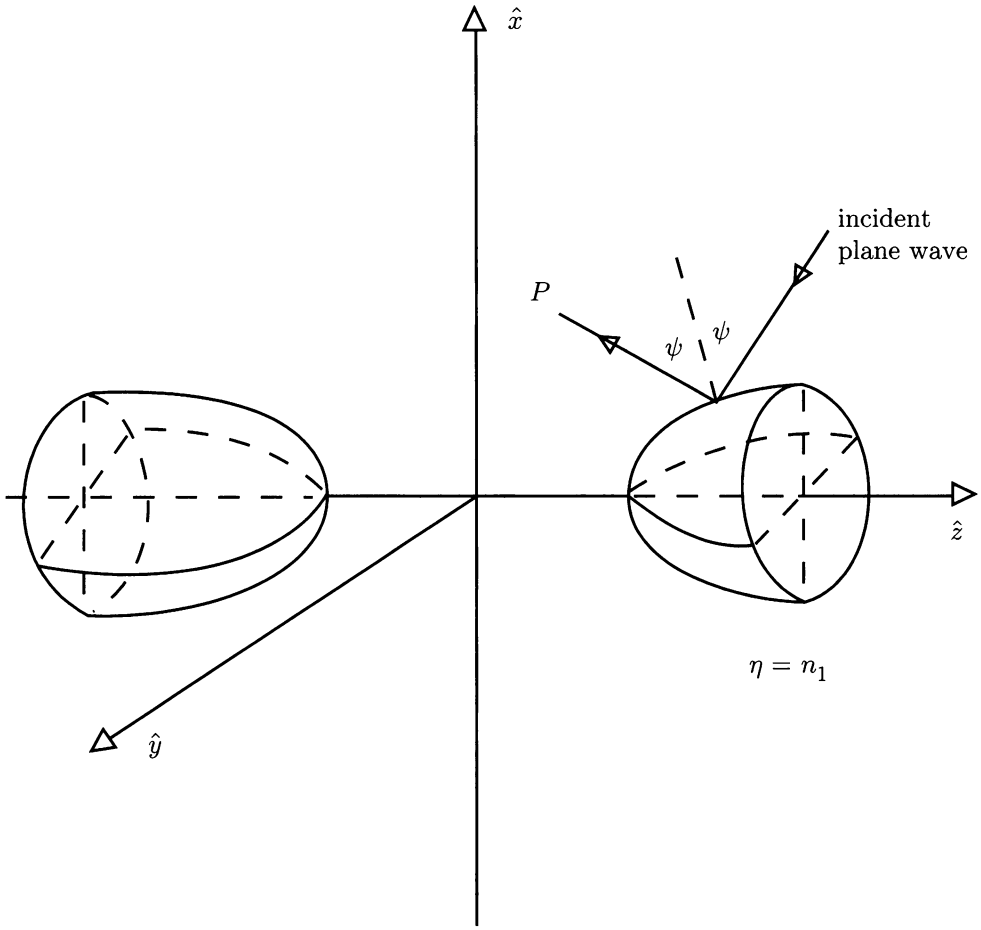

FIG. 5. Reflected field by the hyperboloid of two sheets for plane wave incidence

Again we retrieve the reduced wave equation for the circular cone when $\varepsilon = 0$.

III.A. *The asymptotic expansion of the scattered field for the hyperboloidal scatterer.* Let the hyperboloidal scatterer have as its scattered field U_h given by

$$U_h \sim \sum_{q=0}^{\infty} \varepsilon^{2q} Q_{2q}(r, \theta, \psi), \tag{3.6}$$

where the scattering function Q_{2q} is to be determined as usual. Using the same argument as in section II.C, we have

$$Q_0 = U_c, \tag{3.7}$$

the scattered field for the circular cone (for $\theta + \theta_0 < 2\theta_1 - \pi$, see Fig. 6) which has the expansion (as by Bowman et al. 1969, [2]),

$$\begin{aligned} U_c &= \left(\frac{\pi}{2kr}\right)^{\frac{1}{2}} e^{\frac{1}{4}\pi i} \sum_{m=0}^{\infty} \varepsilon_m \cos m(\phi - \phi_0) \int_0^{\infty} d\tau \cdot \tau \frac{\tanh \pi\tau}{\cosh \pi\tau} \\ &= e^{-\frac{1}{2}\tau\pi} H_{i\tau}^{(1)}(kr) \\ &= \frac{K_\tau^m(\cos\theta) K_\tau^m(\cos\theta_0) K_\tau^m(-\cos\theta_1)}{\Gamma(\frac{1}{2} + m + i\tau)\Gamma(\frac{1}{2} + m - i\tau) K_\tau^m(\cos\theta_1)} \end{aligned} \tag{3.8}$$

where $K_\tau^m(\cdot)$ is a conical function which may be defined in terms of the Legendre function $P_n^m(\cdot)$ as

$$K_\tau^m(x) = P_{i\tau - \frac{1}{2}}^m(x), \tag{3.9}$$

and $H_\tau^{(1)}(\cdot)$ is the Hankel function of the first kind, while other symbols have their usual meanings. The incident wave U_i is given by

$$U_i = \exp\{-ik(x \sin\xi + z\cos\xi)\}. \tag{3.10}$$

On application of the regular perturbation method (as in Sec. II.B, and in [10]) and following the procedure in [10] we obtain

$$\begin{aligned} L_{\varepsilon^0} Q_0 = \left(\frac{\alpha}{r}\right)^2 \Bigg\{ & -2\cos\theta \left[\frac{3}{r^2} - \frac{4}{r}(H_{i\tau}^{(1)}(kr))^{-1} \frac{\partial}{\partial r} H_{i\tau}^{(1)}(kr) + (H_{i\tau}^{(1)}(kr))^{-1} \frac{\partial^2}{\partial r^2}(H_{i\tau}^{(1)}(kr))\right] \\ & + \frac{1}{r}\sin 2\theta (K_\tau^m(\cos\theta))^{-1} \left[(H_{i\tau}^{(1)}(kr))^{-1} \frac{\partial H_{i\tau}^{(1)}(kr)}{\partial r} - \frac{2}{r}\right] \frac{\partial}{\partial\theta}(K_\tau^m(\cos\theta) \\ & - \frac{\cos 2\theta}{r^2}(K_\tau^m(\cos\theta))^{-1} \frac{\partial^2}{\partial\theta^2}(K_\tau^m(\cos\theta)) \\ & - \frac{3(r+2)}{2r^2}\cos 2\theta \left[H_{i\tau}^{(1)}(kr))^{-1} \frac{\partial}{\partial r} H_{i\tau}^{(1)}(kr) - \frac{2}{r}\right] \\ & + \frac{1}{2r^2}(1 + 2\sin 2\theta - 2\cot\theta)(K_\tau^m(\cos\theta))^{-1} \frac{\partial}{\partial\theta}(K_\tau^m(\cos\theta)) \\ & - \frac{m^2}{r^2}(\operatorname{cosec}^2\theta - 2) + k^2\cos 2\theta \Bigg\} U_c. \end{aligned} \tag{3.11}$$

The Green's function in spherical coordinates is given by Morse and Feshbach 1953 [8] as

$$\begin{aligned} G = \frac{ik}{4\pi} \sum_{m=0}^{\infty} \varepsilon_m (2n+1) \frac{(n-m)!}{(n+m)!} \cos m(\psi - \psi_0) \\ \cdot P_n^m(\cos\theta_0) P_n^m(\cos\theta) j_n(kr_0) h_n(kr), \quad r \geq r_0. \end{aligned} \tag{3.12}$$

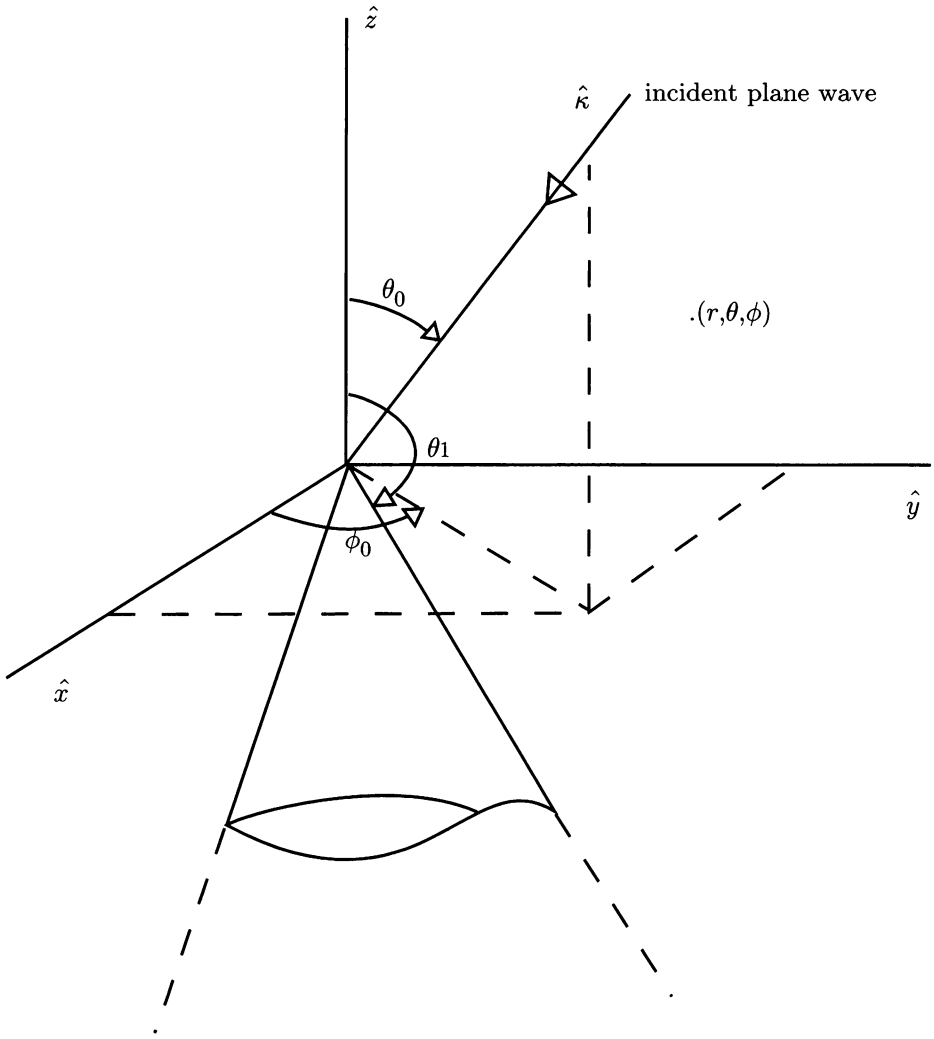

FIG. 6. Scalar plane wave illumination of the circular cone

Now Q_{2q} is obtained from

$$Q_{2q} = \int_0^{2\pi} \int_0^{\pi} \int_{r_0}^{\infty} G \left(\sum_{i=0}^{q-1} L_{\varepsilon^{2i}} Q_{2(q-1-i)} \right) r^2 \sin\theta \, dr \, d\theta \, d\psi \tag{3.13}$$

so that

$$Q_2 = \int_0^{2\pi} \int_0^{\pi} \int_{r_0}^{\infty} G(r_0, \theta_0, \psi_0; r, \theta, \psi)(L_{\varepsilon^0} Q_0) r^2 \sin\theta \, dr \, d\theta \, d\psi. \tag{3.14}$$

A substitution of $L_{\varepsilon^0}Q_0$ and G from (3.11) and (3.12) respectively gives Q_2 as

$$
\begin{aligned}
Q_2 = \int_0^{2\pi}\int_0^{\pi}\int_{r_0}^{\infty} \alpha^2 \Bigg\{ & \frac{ik}{4\pi}\sum_{n,m=0}^{\infty} \varepsilon_m(2n+1)\frac{(n-m)!}{(n+m)!}\cos m(\psi-\psi_0) \\
& \times P_n^m(\cos\theta_0)P_n^m(\cos\theta)j_n(kr)h_n(kr)\Bigg\}\Bigg\{-\cos 2\theta\Bigg[\frac{3}{r}+ \\
& -\frac{4}{r}(H_{i\tau}(kr))^{-1}\frac{\partial}{\partial r}H_{i\tau}^{(1)}(kr)+(H_{i\tau}^{(1)}(kr))^{-1}\frac{\partial^2}{\partial r^2}(H_{i\tau}^{(1)}(kr)) \\
& +\frac{1}{r}\sin 2\theta(K_\tau^m(\cos\theta))^{-1}\left[(H_{i\tau}^{(1)}(kr))^{-1}\frac{\partial}{\partial r}H_{i\tau}^{(1)}(kr)-\frac{2}{r}\right] \\
& \cdot\frac{\partial}{\partial\theta}(K_\tau^m(\cos\theta))-\frac{\cos 2\theta}{r^2}(K_\tau^m(\cos\theta))^{-1}\frac{\partial^2}{\partial\theta^2}(K_\tau^m(\cos\theta)) \\
& -\frac{3(r+2)}{2r^2}\cos 2\theta\left[(H_{i\tau}^{(1)}(kr))^{-1}\frac{\partial}{\partial r}H_{i\tau}^{(1)}(kr)-\frac{2}{r}\right] \\
& +\frac{1}{2r^2}(1+2\sin 2\theta-2\cot\theta)(K_\tau^m(\cos\theta))^{-1}\frac{\partial}{\partial\theta}(K_\tau^m(\cos\theta))^{-1} \\
& -\frac{m^2}{r^2}(\operatorname{cosec}^2\theta-2)+k^2\cos 2\theta\Bigg\}\Bigg\{\left(\frac{\pi}{2kr}\right)^{\frac{1}{2}} e^{\frac{\pi(i-2\tau)}{4}}\frac{\tau\tanh\pi\tau}{\cosh\pi\tau} \\
& \cdot H_{i\tau}^{(1)}(kr)\frac{K_\tau^m(\cos\theta)K_\tau^m(\cos\theta_0)K_\tau^m(-\cos\theta_1)}{\Gamma(\frac{1}{2}+m+i\tau)\Gamma(\frac{1}{2}+m-i\tau)K_\tau^m(\cos\theta_1)}\Bigg\}\sin\theta\,d\tau\,dr\,d\theta\,d\psi.
\end{aligned}
$$

Once again, G and $L_{\varepsilon^0}Q_0$ are bounded and finite so that Q_2 as given in (3.15) is bounded and finite. We may then compute subsequent Q_{2n} for $n>1$, thus obtaining U_h as

$$U_h \sim U_c + \varepsilon^2 Q_2 + \varepsilon^4 Q_4 + \cdots. \tag{3.16}$$

An estimate of the asymptotic error follows as in [10].

IV. A comparison study of shape-approximation methods. The two methods under consideration are:

(i) the surface approximation or Boundary Perturbation Method;

(ii) the Parameter-Expansion Method—that developed in this work.

The parameter-expansion method requires the transformation of the reduced wave equation and obtaining the solution of such in terms of the circular scatterer. On the other hand, the boundary perturbation method does not require solving the Helmholtz equation but rather matching boundary conditions at the perturbed boundary.

Pioneer work on boundary perturbation was carried out by V. S. Erma [5], 1968, where the irregular surface was expressed in terms of the circular coordinates in the form

$$r = r_s(\theta) = a[1+\varepsilon f_1(\theta)+\varepsilon^2 f_2(\theta)+\cdots], \tag{4.1}$$

where $a =$ radius of the unperturbed scatterer, ε is a constant that Erma calls "the smallness parameter" and f is a function satisfying the condition

$$|\varepsilon f_1(\theta)+\varepsilon^2 f_2(\theta)+\cdots| < 1, \quad 0\le\theta\le\pi.$$

Erma admits the fact that this representation leads to needless complications in the vector problem of electromagnetic scattering and, in fact, makes it impossible to obtain

a single analytical expression valid to all orders in the perturbation. So he settles for the much simpler representation

$$r = r_s(\theta) = a[1 + \varepsilon f(\theta)], \quad |\varepsilon f(\theta)| < 1, \ 0 < \theta < \pi. \tag{4.2}$$

Though Erma in this paper makes reference to an earlier publication [4], 1963, where he used the complete expansion (4.1), one would readily observe that in obtaining the electrostatic operator $\vec{n}$ (as in [4]), terms of $O(\varepsilon^2)$ are dropped and, later in the final expression for the electrostatic total charge Q, terms of $O(\varepsilon^2)$ reappear.

Datta [3], 1973 studied the oscillations of a spheroidal inclusion employing the method of boundary perturbation. The spheroidal inclusion was expressed in the spherical polar coordinates (r, θ, ϕ) as

$$r = \frac{a(1-e^2)^{\frac{1}{2}}}{(1-e^2\sin^2\theta)^{\frac{1}{2}}} \tag{4.3}$$

where e is the eccentricity of the spheroid. He then proceeded to obtain the expansion identical to (4.1), namely

$$r = c[1 + \varepsilon(2\sin^2\theta - 1) + \cdots] \tag{4.4}$$

where

$$\varepsilon = \frac{(1-(1-e^2)^{\frac{1}{2}})}{(1+(1-e^2)^{\frac{1}{2}})} \tag{4.5}$$

but truncates this and employs

$$r = c[1 + \varepsilon(2\sin^2\theta - 1)], \tag{4.6}$$

thus neglecting terms of $O(\varepsilon^2)$. Later however, the scattering potential is given in terms of an expansion involving higher-order terms. This is not a uniform expansion.

This is also true for the surface approximation technique of Senior and Uslenghi [2] (which is not a parameter expansion since the surface function ξ is used in the expansion). In this case the spheroidal surface is defined in terms of spherical polar coordinates (r, θ, ψ) by

$$r = a\left(\frac{\xi^2 - 1}{\xi^2 - \cos^2\theta}\right)^{\frac{1}{2}} \tag{4.7}$$

where $\xi^2 - 1 \gg 1$. However, eventually what is used for matching the boundary condition is

$$r = a\left(1 - \frac{\xi}{2}\sin^2\theta\right), \qquad \varepsilon = \frac{1}{\xi^2 - 1}, \tag{4.8}$$

which are the first two terms of the expansion of (4.7).

This gives the parameter-expansion method a clear edge over the boundary perturbation methods since the full expansions of the coordinate transformations are used throughout the method, thus leading to a uniform expansion for the scattered wave.

Next, for all cases of boundary perturbations, the method is valid for axial incidence only. This is obvious since the boundary perturbation method requires that the spheroidal wave coordinate ν be mapped onto the polar spherical coordinate θ (under the transformation), that is, $\theta = \nu$ be fixed. This weakness in the boundary perturbation

method is, however, taken care of in the parameter-expansion method where the full expansion for ν in terms of θ, namely,

$$\nu = \theta + \left(\frac{a}{2r}\right)^2 \sin 2\theta \cdot \varepsilon^2 + O(\varepsilon^4) \tag{4.9}$$

is used, thus permitting us to obtain scattering potentials for varied incidences (i.e., any incidence).

A common difficulty in both methods is the fact that calculations in shape approximations are usually tedious and hence the cumbersome nature of the full expression for the scattering potential.

V. Conclusion. Apart from the usual powerful advantage of a parameter expansion, the method (as any shape-approximation method) has a special advantage over the traditional methods in that the scattering potentials for the elliptic cylinder may be obtained in terms of simpler functions (circular functions) instead of the more complicated radial and angular functions. Furthermore, scattering and diffraction problems whose solutions are known for the circular cylinder can very easily be transcribed to the elliptic cylindrical scatterers, and vice versa through a careful limiting process.

The parameter-expansion method developed can be applied virtually to any convex body provided the coordinate transformation to an approximating much simpler scatterer is possible. Such a transformation would be with respect to a suitably chosen parameter. As the search for more effective radiative convex bodies and scatterers continues, in the engineering and physical sciences, coupled with the necessity for the simplicity of functions involved in the asymptotic solutions to the scattering problems, the parameter-expansion method may then become a priceless gem to the scattering theory.

References

[1] M. Abramowitz and L. A. Stegun, *Handbook of Mathematical Functions*, Dover, New York, 1965

[2] J. J. Bowman, T. B. A. Senior, and P. L. E. Uslenghi, *Electromagnetic and Acoustic Scattering by Simple Shapes*, North-Holland Publishing Company, Amsterdam, 1969

[3] S. K. Datta, *Interaction of a plane compressional wave with a rigid spheroidal inclusion*, Quart. Appl. Math. **31** (1973)

[4] V. A. Erma, *Perturbation approach to the electrostatic problem for irregularly shaped conductors*, Journal of Mathematical Physics **4**, No. 2, 1517–1526 (1963)

[5] V. A. Erma, *An exact solution for the scattering of electromagnetic waves from conductors of arbitrary shape*, 1. *Case of cylindrical symmetry*, Physical Review **173**, 1243–1257 (1968)

[6] I. S. Gradshteyn and I. W. Ryzhik, *Table of Integrals, Series and Products*, Academic Press, New York, 1963

[7] A. C. Hewson, *An Introduction to the Theory of Electromagnetic Waves*, Longman Group Ltd., London, 1970

[8] P. M. Morse and H. Feshback, *Methods of Mathematical Physics*, McGraw-Hill Book Co., New York, 1953

[9] A. Sommerfeld and J. Rung, *Anvedung der Vektorrechung aud die Griendlages det gometrischen Optik*, Ann. Physik. **35**, 277–298 (1911)

[10] Thomas M. Acho, *Scalar wave scattering of a prolate spheroid as a parameter expansion of that of a sphere*, Quart. Appl. Math. **50**, 451–468 (1992)