EXTENDING A DISK TO A SPHERE(1)

BY

JOSEPH M. MARTIN(2)

This paper deals with the problem of extending a disk in E^3 to a 2-sphere in E^3. In [5] R. H. Bing points out that there is a disk in E^3 which is not a subset of any 2-sphere in E^3 and gives an example of such a disk. This example is reproduced as Example 1 of §III, and Theorem 2 of §II is used to give a proof that it does not lie on a 2-sphere in E^3. In the same paper Bing proves that "small" subdisks of a disk in E^3 lie on 2-spheres in E^3.

THEOREM 2.1 OF [5]. *Suppose that D is a disk in E^3 and $p \in \operatorname{Int} D$. Then there is a 2-sphere S in E^3 and a disk D' in D such that $p \in \operatorname{Int} D'$ and $D' \subset S$.*

In [9], it is shown that if D is a disk in E^3 which is locally polyhedral at each point of $\operatorname{Int} D$, then D lies on a 2-sphere in E^3.

In this paper, Theorem 1 of §II gives a necessary and sufficient condition on the embedding of a disk in E^3 in order that it should lie on a 2-sphere in E^3. Theorem 2 of §II shows that in some cases the fact that a certain subdisk of a disk lies on a 2-sphere implies that the disk itself lies on a 2-sphere. This theorem is an extension of a result of R. J. Bean [2].

§III of this paper is devoted to examples. Example 2 of §III shows that a disk need not lie on a 2-sphere even though both (1) every closed proper subset lies on a 2-sphere, and (2) every arc on the disk is tame. Example 3 of §III shows that a disk D need not lie on a 2-sphere even though Bd D can be shrunk to a point in $E^3 - \operatorname{Int} D$.

I. **Notation and terminology.** If n is a positive integer, E^n will denote Euclidean n-space with the usual metric topology.

A *disk* is a space which is topologically equivalent to $\{(x_1,x_2);\ (x_1,x_2) \in E^2 \text{ and } x_1^2 + x_2^2 \leqq 1\}$. An *annulus* is a space which is topologically equivalent to the product of a circle and a closed interval. If D is a disk, the interior of D, denoted by $\operatorname{Int} D$, is the set of all points of D which have neighborhoods homeomorphic with E^2, and the *boundary* of D, denoted by $\operatorname{Bd} D$, is $D - \operatorname{Int} D$. Similar terminology is used for the interior and boundary of an annulus. The boundary of an annulus A is the union of two disjoint simple

Presented to the Society, November 18, 1961 under the title *Disks on spheres*; received by the editors December 6, 1962.

(1) This paper is a major part of the author's doctoral dissertation at the State University of Iowa written under the direction of Professor S. Armentrout.

(2) This paper was written while the author was a Fellow of the National Science Foundation.

closed curves J_1 and J_2, and J is a boundary component of A if and only if either $J = J_1$ or $J = J_2$.

The word "interior" is used in another sense. If S is a sphere with handles in E^3, then the *interior* of S, denoted by $\operatorname{Int} S$, is the bounded complementary domain of S. This double usage should not cause confusion.

A *2-sphere* is a space which is homeomorphic with

$$\{(x_1, x_2, x_3);\ (x_1, x_2, x_3) \in E^3 \text{ and } x_1^2 + x_2^2 + x_3^2 = 1\}.$$

Suppose that n and k are positive integers and $n \leqq k$. A set X in E^k is an *n-manifold* if and only if each point of X has a neighborhood in X which is homeomorphic with E^n, and a set X in E^k is an *n-manifold-with-boundary* if and only if each point in X has a neighborhood whose closure in X is homeomorphic with the unit cube in E^n.

A set X in E^3 is a *polyhedron* or is *polyhedral* if and only if for some n, $n = 0, 1, 2$, or 3, X is the union of the elements of a rectilinear n-complex. A set X in E^3 is *locally polyhedral* at a point p of X if and only if there exists an open set N containing p such that $\bar{N} \cap X$ is a polyhedron.

Suppose that X is a closed set in E^3 and X is homeomorphic with a polyhedron. X is *tame* if and only if there is a homeomorphism h of E^3 onto itself such that $h(X)$ is a polyhedron, and X is *wild* if and only if X is not tame. Examples of wild sets may be found in [1], [3], [7], and [8].

A simple closed curve J in a space X *can be shrunk to a point* in X if and only if there is a continuous map f of a standard 2-simplex E into X such that f carries $\operatorname{Bd} E$ homeomorphically onto J.

A space X is *simply connected* if and only if each simple closed curve in X can be shrunk to a point in X.

A triangulated space D is a *Dehn disk* if and only if there exists a semi-linear map f of a standard 2-simplex E onto D such that there exists an annulus A on E such that (i) $\operatorname{Bd} E \subset A$, (ii) f is a homeomorphism on A, and (iii) $f(E - A) \cap f(A) = \emptyset$.

A map f satisfying the above conditions is a *defining map* for D.

If D is a Dehn disk and f is a defining map for D, the *f-boundary* of D is $f(\operatorname{Bd} E)$.

If D is a Dehn disk and f is a defining map for D, then the set of *f-singularities* of D is $\{z;\ z \in D \text{ and } f^{-1}(z) \text{ is nondegenerate}\}$.

If n is a positive integer and x and y are points of E^n, the Euclidean distance from x to y is denoted by $d(x, y)$.

For terms not defined in this paper the reader may see [4] or [6].

II. Conditions under which a disk can be extended to a sphere.

THEOREM 1. *A disk D in E^3 lies on a 2-sphere in E^3 if and only if there exists an annulus A in E^3 such that $\operatorname{Bd} D \subset \operatorname{Bd} A$, $D \cap A = \operatorname{Bd} D$, and $\operatorname{Bd} A - \operatorname{Bd} D$ can be shrunk to a point in $E^3 - D$.*

The proof of Theorem 1 given here relies heavily on an approximation theorem proved by Bing and Dehn's Lemma as proved by Papakyriakopoulos. For completeness these are stated below.

BING'S APPROXIMATION THEOREM. *If, in a triangulated 3-manifold S, M is a 2-manifold-with-boundary and f is a non-negative continuous real-valued function defined on M, there is in S a 2-manifold-with-boundary M' and a homeomorphism h of M onto M' such that* (1) $d(x,h(x)) \leqq f(x)$ *and* (2) *if* $f(x) > 0$, M' *is locally polyhedral at* $h(x)$ [4].

DEHN'S LEMMA (AS PROVED BY PAPAKYRIAKOPOULOS). *Suppose that D is a Dehn disk in E^3, f is a defining map for D, and U is a neighborhood of the f-singularities of D. Then there exists a polyhedral disk D' in E^3 such that* $\operatorname{Bd} D' = f$*-boundary of D and* $D' \subset D \cup U$ [10].

Proof of Theorem 1. The necessity of the condition is obvious.

Let D be a disk in E^3 and A an annulus in E^3 such that D and A satisfy the hypothesis of Theorem 1. Let J_1 denote the boundary component of A different from $\operatorname{Bd} D$. Since J_1 can be shrunk to a point in $E^3 - D$, there exists a continuous map f_1 of a standard 2-simplex E into $E^3 - D$ taking the boundary of E homeomorphically onto J_1. Let K denote $f_1(E)$. There is no loss in generality in assuming that $K \cap A = J_1$. This is true since $K \cap D = \emptyset$, and if necessary the annulus A can be trimmed back to a smaller annulus having the desired property.

A continuous non-negative real-valued function g is defined on A as follows: if $x \in A$, $g(x) = \min\{\operatorname{dist}(x,D), \operatorname{dist}(x,K)\}$. g is zero on $J_1 \cup \operatorname{Bd} D$ and positive elsewhere. By Bing's Approximation Theorem there exists an annulus A' such that $\operatorname{Bd} A' = J_1 \cup \operatorname{Bd} D$, $A' \cap D = \operatorname{Bd} D$, $A' \cap K = J_1$, and if $x \in \operatorname{Int} A'$, then A' is locally polyhedral at x.

Let J' be a polygonal simple closed curve in $\operatorname{Int} A'$ which is homotopic in A' to J_1. Let B denote the annulus on A' whose boundary components are $\operatorname{Bd} D$ and J', C' denote $[\overline{(A' \cup K) - B}]$, $v_1, v_2, \cdots$, and v_n denote the vertices of J', and e denote $\operatorname{dist}(C', D)$. There exists a continuous map f_2 of a standard 2-simplex E onto C' carrying $\operatorname{Bd} E$ onto J' and which is one-to-one on $\operatorname{Bd} E$. Let r be a positive number such that if $d(x,y) < r$, then $d(f_2(x), f_2(y)) < e$.

Let T be a triangulation of E such that $(\operatorname{mesh} T) < r$ and $f_2^{-1}(v_1), f_2^{-1}(v_2), \cdots$, and $f_2^{-1}(v_n)$ are vertices of T. Now there exists a piecewise linear map f_3 of E into E^3 defined as follows: Suppose that $\langle u_1, u_2, u_3 \rangle$ is a 2-simplex in T. For $i = 1, 2$, or 3, let $f_3(u_i)$ be $f_2(u_i)$, and let f_3 be extended linearly, taking u_1, u_2, u_3 onto the simplex in E^3 determined by $f_3(u_1)$, $f_3(u_2)$, and $f_3(u_3)$. Because of the choice of e and r, $f_3(E) \cap D = \emptyset$.

Let J'' be a polygonal simple closed curve in $\operatorname{Int} A'$ such that J'' is homotopic to $\operatorname{Bd} D$ in $A' - J'$ and if A_1 denotes the annulus on A' bounded by J'' and $\operatorname{Bd} D$, then $A_1 \cap f_3(E) = \emptyset$. Let K' denote $[\overline{(A' - A_1)} \cup f_3(E)]$. K' is a Dehn disk and

there exists a defining map f_4 from a standard 2-simplex E_1 onto K' such that J'' is the f_4-boundary of K'. Here it is convenient to think of E as being contained in the interior of E_1 and to think of f_4 as an extension of f_3.

Let U be a neighborhood of the f_4-singularities of K' such that $U \cup (D \cup A_1) = \emptyset$. Since K' and U satisfy the hypothesis of Dehn's Lemma, as proved by Papakyriakopoulos, there is a polyhedral disk K^* such that $\operatorname{Bd} K^* = J''$ and $K^* \subset K' \cup U$. The last condition implies that $K^* \cap (D \cup A_1) = J''$. Let D_1 denote $K^* \cup A_1$. D_1 is a disk such that the common part of D and D_1 is the boundary of each. This shows that D lies on a 2-sphere in E^3.

COROLLARY 1.1. *Suppose that D is a disk in E^3 such that* (1) *$E^3 - D$ is simply connected, and* (2) *there is an open subset U of D such that $\bar{U} \cap \operatorname{Bd} D = \emptyset$ and $D - U$ lies on a 2-sphere in E^3. Then D lies on a 2-sphere in E^3.*

Proof. Suppose that D and U satisfy the hypothesis of the corollary. Let S be a 2-sphere in E^3 such that $D - U \subset S$. Now there exists an annulus A on $S - \operatorname{Int} D$ such that $\operatorname{Bd} D \subset A$ and $A \cap \bar{U} = \emptyset$. Since $E^3 - D$ is simply connected, $\operatorname{Bd} A - \operatorname{Bd} D$ can be shrunk to a point in $E^3 - D$. It follows from Theorem 1 that D lies on a 2-sphere in E^3.

COROLLARY 1.2. *If D is a disk in E^3 such that $\operatorname{Bd} D$ can be shrunk to a point in $E^3 - \operatorname{Int} D$ and D' is a subdisk of D such that $D' \subset \operatorname{Int} D$, then D' lies on a 2-sphere in E^3.*

THEOREM 2. *Suppose that D is a disk in E^3 which lies on a 2-sphere in E^3. Suppose further that A is a polyhedral annulus in E^3 such that $A \cap D = \operatorname{Bd} D$ and $\operatorname{Bd} D \subset \operatorname{Bd} A$. Then $D \cup A$ lies on a 2-sphere in E^3.*

Before proceeding with the proof of Theorem 2 some additional definitions and terminology will be introduced.

If J is a simple closed curve in E^3, the statement that J is *unknotted* means that there is a homeomorphism of E^3 onto itself carrying J into a plane.

A *torus* is a space which is topologically equivalent to the product of two circles. A *solid torus* is a space which is topologically equivalent to the product of a circle and a disk. A torus T is *unknotted* if and only if the closure of each complementary domain of T in S^3 is a solid torus. If T is an unknotted torus in E^3 the solid torus $T \cup \operatorname{Int} T$ will be denoted by T^*.

Let T be an unknotted polyhedral torus in E^3. A polygonal simple closed curve J on T is *trivial* on T if and only if J is null homologous on T. A polygonal simple closed curve J on T is *meridianal* on T if and only if J is nontrivial on T and J bounds a disk in T^*. A polygonal simple closed curve J on T is *longitudinal* on T if and only if J is nontrivial on T and J bounds a disk in $E^3 - \operatorname{Int} T$. In [11] it is shown that any two meridianal curves are homologous on T and that

any two longitudinal curves are homologous on T. It is also shown that if J_1 is meridianal (longitudinal) and J_2 is homologous to J_1 on T, then J_2 is meridianal (longitudinal). A polyhedral disk D such that $\operatorname{Int} D \subset \operatorname{Int} T$ and such that $\operatorname{Bd} D$ is a meridianal curve on T is a *meridianal disk* of T^*.

Let T^* be separated by two disjoint meridianal disks D_1 and D_2 into two 3-cells K_1 and K_2. Let x be a point of $\operatorname{Int} D_1$ and y be a point of $\operatorname{Int} D_2$. Let a_1 and a_2 be unknotted chords of K_1 and K_2, respectively, joining the points x and y. The simple closed curve $a_1 \cup a_2$ is a *centerline* of T^*. In [11] it is shown that if L_1 and L_2 are centerlines of T^*, then there exists a semi-linear mapping of E^3 onto itself which is the identity of $E^3 - T^*$ and takes L_1 onto L_2.

The preceding terminology is that of Schubert in [11], and the first of the following lemmas is an immediate consequence of results in the same paper.

LEMMA 1. *If T is an unknotted polyhedral torus in E^3, D is a disk in E^3 bounded by a centerline of T^*, and J is a nontrivial polygonal simple closed curve on T such that $J \cap D = \emptyset$, then J is longitudinal on T.*

LEMMA 2. *If T is an unknotted polyhedral torus in E^3 and J_1 and J_2 are polygonal simple closed curves on T such that any nontrivial simple closed curve in $J_1 \cup J_2$ is longitudinal on T, then there exists an open annulus O on T such that J_1 and J_2 are homotopic in $T - O$.*

Proof. Let T, J_1, and J_2 satisfy the hypothesis. Without loss of generality it is assumed that $J_1 \neq J_2$, $J_1 \cap J_2 \neq \emptyset$, and $J_1 \cap J_2$ contains no arc. Let A be the annulus ring obtained by cutting T along J_1 and let P be the identification mapping of A onto T.

Let the boundary components of A be denoted by L_1 and L_2. Let C be a component of $J_2 - J_1$. $\overline{P^{-1}(C)}$ is an arc in A with both endpoints on $\operatorname{Bd} A$. Suppose that $\overline{P^{-1}(C)}$ has an endpoint q_1 on L_1 and an endpoint q_2 on L_2. Let q_1' denote the point on L_2 having the same image under P as q_1. Let a be an arc in L_2 from q_2 to q_1'. Then $\overline{P^{-1}(C)} \cup a$ is an arc in A from q_1 to q_1', and hence $P(\overline{P^{-1}(C)} \cup a)$ is a simple closed curve on T. But $P(\overline{P^{-1}(C)} \cup a)$ is contained in $J_1 \cup J_2$ and is not longitudinal on T. This is contradictory to the hypothesis and it follows that either both endpoints of $\overline{P^{-1}(C)}$ are on L_1 or both endpoints of $\overline{P^{-1}(C)}$ are on L_2.

Let $J_1 \cap J_2$ be $\{p_1, p_2, \cdots, p_n\}$, the components of $J_2 - J_1$ be $C_1, C_2, \cdots$, and C_n and assume that the notation is chosen so that $\overline{C_1} \cap \overline{C_n} = p_1$, and if $i + 1 \leqq n$, $\overline{C_i} \cap \overline{C_{i+1}} = p_{i+1}$. For each i, $i \leqq n$, let D_i denote the open disk on $\operatorname{Int} A$ bounded by $\overline{P^{-1}(C_i)}$. Then $\overline{D_i}$ is a disk in A which has an arc in common with $\operatorname{Bd} A$, and $P(\overline{D_i})$ is a disk in T bounded by the union of an arc in J_1 from p_i to p_{i+1} and an arc in J_2 from p_i to p_{i+1}. Now $\operatorname{Int} A - \bigcup_{i=1}^n \overline{D_i}$ is an open annulus on A. Let O denote $P(\operatorname{Int} A - \bigcup_{i=1}^n \overline{D_i})$. O is an open annulus on T such that $\bar{O} - O \subset J_1 \cup J_2$. For each i, $i \leqq n$, let h_i be a homotopy in $\bar{D}_i$ pulling $\overline{P^{-1}(C_i)}$ into $\operatorname{Bd} A$ and leaving

$P^{-1}(p_i)$ and $P^{-1}(p_{i+1})$ fixed. Then Ph_i is a homotopy in $P(\bar{D}_i)$ pulling an arc in J_2 bounded by p_i and p_{i+1} onto an arc in J_1 bounded by p_i and p_{i+1}, leaving p_i and p_{i+1} fixed. It follows that there is a homotopy H in $T-O$ pulling J_1 onto J_2.

LEMMA 3. *Suppose that T is a polyhedral unknotted torus in E^3, D is a disk such that* $\operatorname{Bd} D$ *is a centerline of T^*, and J_1 and J_2 are polygonal longitudinal simple closed curves on T such that for $i=1$ or 2, $J_i \cap D = \emptyset$. Then there is an open annulus O on T such that J_1 and J_2 are homotopic in $T-O$ and if M is a meridianal polygonal simple closed curve on T, then $M \cap O \cap D \neq \emptyset$.*

Proof. Let T, J_1, J_2, and D satisfy the hypothesis of the lemma. Let L be a polygonal simple closed curve in $D \cap T$ which is a longitude of T. Now if $J_1 \cap J_2 = \emptyset$, let O be the component of $T-(J_1 \cup J_2)$ which contains L. If $J_1 \cap J_2 \neq \emptyset$, let O be the open annulus promised by Lemma 2. In this case it follows from the proof of Lemma 2 that $L \subset O$. This is because the components of $T-(O \cup J_1 \cup J_2)$ are open disks. Now if M is a meridian of T, then $M \cap L \neq \emptyset$, since it follows from Lemma 1 that every meridian of T intersects every longitude of T. Hence $M \cap O \cap D \neq \emptyset$.

LEMMA 4. *Suppose that A is a planar polyhedral annulus in E^3, J_1 and J_2 are the boundary components of A, and $e>0$. Then there exists a polyhedral torus T_e such that* (1) *J_1 is a centerline of T_e^*,* (2) *$J_2 \subset E^3 - T_e^*$,* (3) *$A \cap T_e$ is a longitudinal polygonal simple closed curve on T, and* (4) *if $x \in T_e$ there exists a meridianal polygonal simple closed curve J_x on T_e such that $x \in J_x$ and* $(\operatorname{diam} J_x) < e$.

Proof of Theorem 2. Let D and A satisfy the hypothesis of Theorem 2. Let S be a 2-sphere in E^3 such that $D \subset S$. Let D' denote $S - \operatorname{Int} D$. D' is a disk such that $D \cap D' = \operatorname{Bd} D$ and $\operatorname{Bd} D' = \operatorname{Bd} D$. By the Bing Approximation Theorem there is no loss in generality in assuming that D' is locally polyhedral except at points on $\operatorname{Bd} D'$. Let the simple closed curve $\operatorname{Bd} A - D$ be denoted by J. It follows from Lemma 4 and the fact that A is polyhedral that there exists a sequence $T_1, T_2, \cdots$ of polyhedral tori such that for each i, (1) $\operatorname{Bd} D$ is a centerline of T_i, (2) $T_{i+1} \subset \operatorname{Int} T_i$, (3) $J \subset E^3 - T_i^*$, (4) $A \cap T_i$ is a longitudinal simple closed curve on T, (5) T_i is unknotted, and (6) if $x \in T_i$ there exists a polygonal meridianal simple closed curve M_x on T_i such that $x \in M_x$ and $(\operatorname{diam} M_x) < 1/i$.

Without loss of generality it may be assumed that the vertices of D' are in relative general position with the vertices of each of $A, T_1, T_2, \cdots$. It follows that for each i, $D' \cap T$ is a finite collection of mutually disjoint simple closed curves. It follows from Lemma 1 and the fact that $\operatorname{Bd} D'$ is a centerline of T_i

that each of these simple closed curves is either trivial on T_i or longitudinal on T_i. Now D' may be adjusted so that, for each i, $D' \cap T_i$ is a single longitudinal simple closed curve on T_i, and it is further assumed that D' is so adjusted.

Let e be $\operatorname{dist}(T_2, E^3 - T_1^*)$. Then if $n > 2$ and $x \in T_n$, $\operatorname{dist}(x, E^3 - T_1^*) > e$. Now there exists a positive number r such that if x and y are points of $\operatorname{Int} D$ and $d(x,y) < r$, then there exists an arc a on $\operatorname{Int} D$ from x to y whose diameter is less than e.

Let n be a positive integer such that $n > 2$ and $1/n < r$. Let J_1 denote $A \cap T_n$ and J_2 denote $D' \cap T_n$. Now for each i, $i = 1$ or 2, $J_i \cap D = \emptyset$ and it follows from Lemma 3 that there exists an open annulus O on T_n such that J_1 and J_2 are homotopic in $T_n - O$ and if M is a polygonal meridianal simple closed curve on T_n, then $M \cap D \cap O \neq \emptyset$.

Suppose that $D \cap (T_n - O) \neq \emptyset$. Let x be a point of $D \cap (T_n - O)$ and let M_x be a polygonal meridianal simple closed curve on T_n such that $x \in M_x$ and $(\operatorname{diam} M_x) < r$. Let y be a point of $M_x \cap D \cap O$. Now there exists an arc a on $\operatorname{Int} D$ from x to y such that $(\operatorname{diam} a) < e$, and it follows from the choice of e that $a \subset T_1^*$. Since $a \cap \operatorname{Bd} D = \emptyset$, there exists an integer k, $k > n$, such that $a \cap T_k^* = \emptyset$. Hence x and y are in the same component of $[\operatorname{Int} T_1^* - (T_k^* \cup A \cup D')]$.

Since A and D' are in relative general position, $J \subset E^3 - T_1^*$, and $D' \cap T_n$ is a single longitudinal simple closed curve on T_n, it follows that the intersection of T_n and the component of $[\operatorname{Int} T_1^* - (T_k^* \cup A \cup D')]$ containing x is the component of $T_n - (J_1 \cup J_2)$ containing x. Since x and y are in different components of $T_n - (J_1 \cup J_2)$ it follows that x and y are in different components of $[\operatorname{Int} T_1^* - (T_k^* \cup A \cup D')]$. This is a contradiction and hence $D \cap (T_n - O) = \emptyset$.

Since J_1 and J_2 are homotopic in $T_n - O$, and since J_2 is contained in the interior of the disk D', it follows that J_1 can be shrunk to a point missing D. It follows from Theorem 1 that there exists a disk D_1 in $D \cup A$ such that $D \subset \operatorname{Int} D_1$ and D_1 lies on a 2-sphere in E^3. It follows from [2] that $D \cup A$ lies on a 2-sphere in E^3. This establishes Theorem 2.

COROLLARY 2.1. *If D is a disk in E^3 and A is a tame annulus such that $A \subset D$, $\operatorname{Bd} D \subset \operatorname{Bd} A$, and $\operatorname{Bd} D$ can be shrunk to a point in $E^3 - \operatorname{Int} D$, then D lies on a 2-sphere in E^3.*

Proof. Let D and A satisfy the hypothesis of the corollary. Since A is tame there is a homeomorphism h of E^3 onto itself carrying A onto a polyhedral annulus A' and D onto a disk D'. Since $\operatorname{Bd} D$ can be shrunk to a point in $E^3 - \operatorname{Int} D$, $\operatorname{Bd} D'$ can be shrunk to a point in $E^3 - \operatorname{Int} D'$, and it follows from Theorem 1 that there exists a disk D_1 such that $D_1 \subset \operatorname{Int} D'$, $\operatorname{Bd} D_1$ is polygonal, $\operatorname{Bd} D_1 \subset A'$, and D_1 lies on a 2-sphere S in E^3. It follows from Theorem 2 that D' lies on a 2-sphere S' in E^3. Then $h^{-1}(S')$ is a 2-sphere in E^3 such that $D \subset h^{-1}(S')$. This establishes Corollary 2.1.

III. Examples.

EXAMPLE 1. *A disk D in E^3 which does not lie on a 2-sphere in E^3.*

DESCRIPTION. The disk D is obtained by taking a horizontal disk D' in E^3; removing two circular holes from $\operatorname{Int} D'$; adding tubes from the holes, one going down and the other up and around; and finally adding hooked disks as in the construction of the Alexander Horned Sphere [1]. See Figure 1.

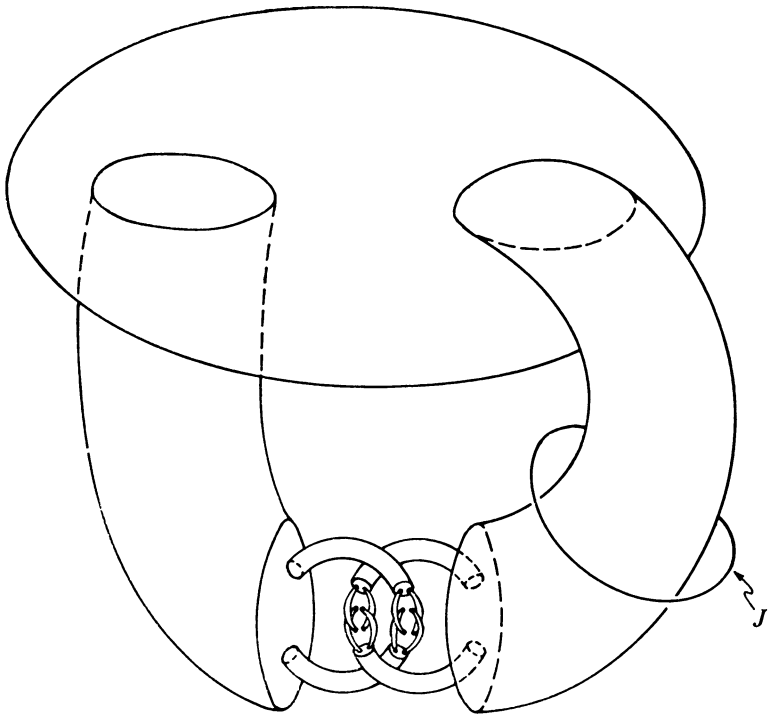

FIGURE 1

PROPOSITION 1.1. *The disk D of Example 1 does not lie on a 2-sphere in E^3.*

Proof. It follows from repeated application of Theorem 9 of [3] that the simple closed curve J of Figure 1 cannot be shrunk to a point in $E^3 - D$. Let A be a polyhedral annulus such that $D \cap A = \operatorname{Bd} D$ and $\operatorname{Bd} A = J \cup \operatorname{Bd} D$. It follows from Theorem 2 that D lies on a 2-sphere in E^3 if and only if $D \cup A$ lies on a 2-sphere in E^3. $D \cup A$ does not lie on a 2-sphere since J cannot be shrunk to a point in $E^3 - D$. This establishes Proposition 1.1.

EXAMPLE 2. *A disk D in E^3 such that* (1) *D does not lie on a 2-sphere in E^3,* (2) *if C is a proper closed subset of D then there exists a 2-sphere S_c such that $C \subset S_c$, and* (3) *every arc in D is tame.*

DESCRIPTION. Let D_0 be a horizontal disk in E^3 with a rectangular boundary. D_0 is now subdivided into two disks E_1 and E_2 whose common part is an arc. Each E_i is thickened into a topological cube. The thickened E_i may be regarded as $E_i \times [0,1]$ with E_i identified with $E_i \times \{1/2\}$. From the center of $E_1 \times \{0\}$ and from the center of $E_2 \times \{1\}$ solid feelers with solid loops H_1 and H_2 are erected in such a way that the loop of H_1 goes around the stem of H_2 and the loop of H_2 goes around the stem of H_1. See Figure 2. The thickened E_i plus H_i

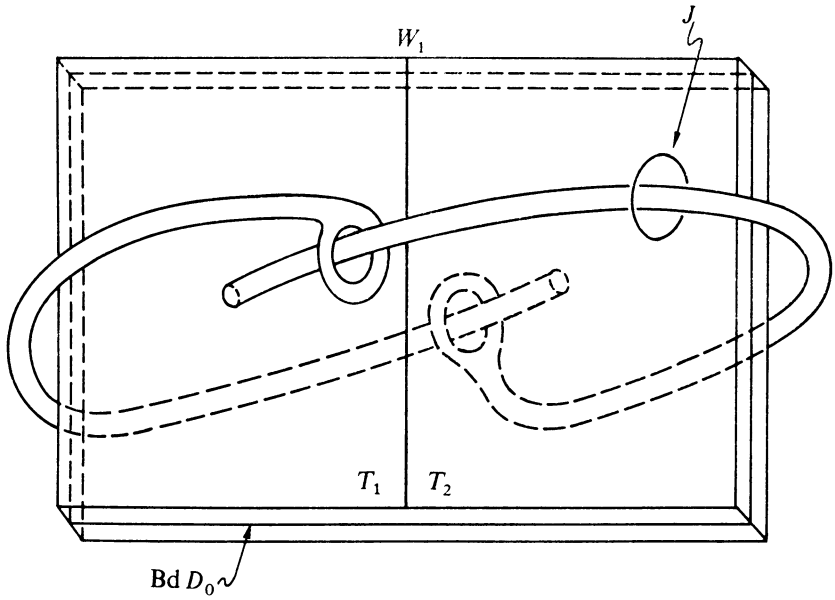

FIGURE 2

is topologically a solid torus T_i. T_i will be called a cube-with-eye-bolt. The disk D will lie in $T_1 \cup T_2$. The construction which follows is motivated by Example 2 of [3].

For each i, $i = 1$ or 2, a slice is removed from the loop of T_i resulting in a topological cube K_i. $\operatorname{Bd} E_i$ separates $\operatorname{Bd} K_i$ into two disks one of which has a "hook" in it. The interior of this hooked disk is pushed slightly into $\operatorname{Int} T_i$ to form a disk A_i.

Let W_1 denote $T_1 \cup T_2$ and let D_1 denote $A_1 \cup A_2$. The 3-manifold-with-boundary W_1 is a first approximation to D and the disk D_1 is also a first approximation to D.

Now each A_i is subdivided into fifteen subdisks $E_{i1}, E_{i2}, \cdots, E_{i15}$ such that if $j \leqq 14$, E_{ij} and E_{ij+1} share an edge, and E_{i1} and E_{i15} share an edge. The disks E_{ij} are thickened slightly and solid feelers with solid loops H_{ij} are added in such a way that the loop of H_{ij} circles the stem of H_{ij+1}, $j \leqq 14$, and the loop of H_{i15} circles the stem of H_{i1}. The stems of H_{i7} and H_{i11} also intertwine as shown in

Figure 3. Let T_{ij} denote $E_{ij} \cup H_{ij}$. The T_{ij}'s are chosen so that $\bigcup_{j=1}^{15} T_{ij} \subset T_i$. In each T_{ij} a disk A_{ij} is placed exactly as A_i was placed in T_i in the previous step. Let W_2 denote $\bigcup_{i=1}^{2} (\bigcup_{j=1}^{15} T_{ij})$ and D_2 denote $\bigcup_{i=1}^{2} (\bigcup_{j=1}^{15} A_{ij})$. W_2 and D_2 are second approximations to the disk D.

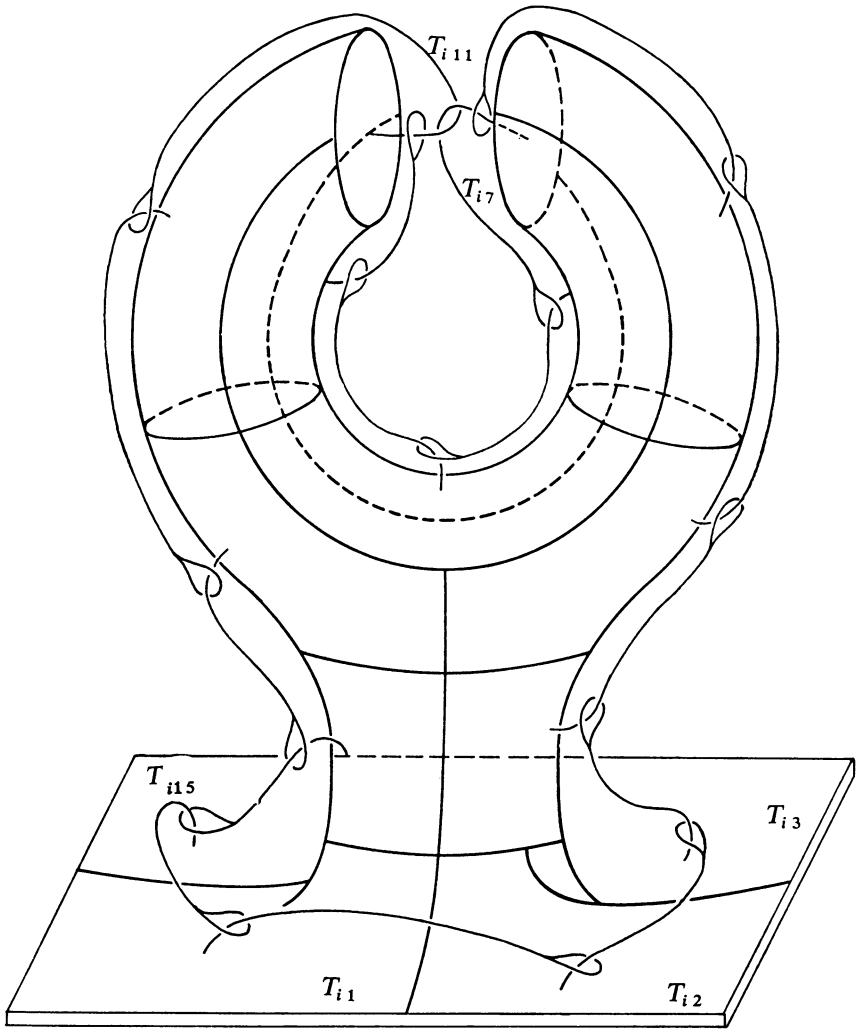

FIGURE 3

Now for each positive integer k, W_{k+1} and D_{k+1} are obtained from D_k in a manner analogous to the way in which W_2 and D_2 are obtained from D_1.

Let D be $\bigcap_{i=1}^{\infty} W_i$; D is also $\lim D_i$. The same argument which is used to show that Example 2 of [3] is a 2-sphere can be used to show that D is a disk.

PROPOSITION 2.1. *The simple closed curve J of Figure 2 cannot be shrunk to a point in $E^3 - D$.*

Proof. Suppose that J can be shrunk to a point in $E^3 - D$. Then, since $D = \bigcap_{i=1}^{\infty} W_i$, there exists a positive integer n such that J can be shrunk to a point in $E^3 - W_n$. Let k be $\min\{n;\ J$ can be shrunk to a point in $E^3 - W_n\}$.

For each i, let W_i' be the set obtained from W_i by filling each hole in each loop in W_i. Let W_i'' be the set obtained by removing slices from the loops of W_i and then adding back the intertwining stems of the 7th and 11th feelers at the next stage.

Since W_1' is a cube with handles and J circles one of these handles exactly once, J cannot be shrunk to a point in $E - W_1'$. It follows from Theorem 11 of [3] that J cannot be shrunk to a point in $E^3 - W_1$ and hence $k > 1$.

Since J cannot be shrunk to a point in $E^3 - W_{k-1}$ it follows from Theorem 9 of [3] that J cannot be shrunk to a point in $E^3 - W_{k-1}''$. By considering a slight isotopy of E^3 together with the adding of handles it follows that J cannot be shrunk to a point in $E^3 - W_k'$. It follows from Theorem 11 of [3] that J cannot be shrunk to a point in $E^3 - W_k$. This is a contradiction and hence establishes Proposition 2.1.

PROPOSITION 2.2. *The disk D of Example 2 does not lie on any 2-sphere in E^3.*

Proof. Let A be a polyhedral annulus in E^3 such that $D \cap A = \operatorname{Bd} D$ and $\operatorname{Bd} A = \operatorname{Bd} D \cup J$. Now, by Theorem 2, D lies on a 2-sphere in E^3 if and only if $D \cup A$ lies on a 2-sphere in E^3. $D \cup A$ does not lie on a 2-sphere in E^3 since, by Proposition 2.1, J cannot be shrunk to a point in $E^3 - D$. This establishes Proposition 2.2.

It will next be shown that if C is a proper closed subset of the disk D of Example 2, then C lies on a 2-sphere in E^3. Before proceeding with the proof of this assertion, two definitions and a theorem from [3] will be stated.

ASSOCIATED ANNULUS. If each of the thickened E_i's is regarded as $E_i \times [0,1]$ with E_i identified with $E_i \times \{1/2\}$, then the annulus associated with the topological torus T_i is $\operatorname{Bd} E_i \times [0,1]$.

ASSOCIATED CUBE. Suppose that C_i is a tame cube in the cube-with-eye-bolt T_i such that $\operatorname{Bd} C_i \cap \operatorname{Bd} T_i$ is the annulus associated with T_i. Then C_i is a cube associated with T_i.

THEOREM 4 OF [3]. *Suppose that n and m are positive integers, $n > m$. Suppose that T is a cube-with-eye-bolt at the mth stage in the description of D and T' is a cube-with-eye-bolt at the nth stage in the description of D such that $T' \subset T$. Then if C' is a cube associated with T' there exists a cube C associated with T such that $C' \subset C$, and if T'' is a cube-with-eye-bolt at the nth stage in the description of D and $T'' \neq T'$, then $T'' \subset C$.*

Let C be a proper closed subset of D. Consider the following modification of the construction of D which will result in a disk $D(C)$ such that $C \subset D(C)$. If $C \cap T_i \neq \emptyset$, let $T(C)_i$ be T_i. If $C \cap T_i = \emptyset$, let $T(C)_i$ be a cube associated with T_i which contains E_i. Let $W(C)_1$ denote $T(C)_1 \cup T(C)_2$. The 3-manifold-with-boundary $W(C)_1$ is a first approximation to $D(C)$.

Disks $A(C)_1$ and $A(C)_2$ are now selected in $T(C)_1$ and $T(C)_2$ in the following way:

(1) If $T(C)_i = T_i$, let $A(C)_i$ be A_i.

(2) If $T(C)_i$ is a cube associated with T_i, let $A(C)_i$ be E_i.

Let $D(C)_1$ denote $A(C)_1 \cup A(C)_2$. The disk $D(C)_1$ is also a first approximation to $D(C)$.

Suppose that i is an integer such that $T(C)_i = T_i$. Now if j is an integer such that $C \cap T_{ij} = \emptyset$, let $T(C)_{ij}$ be a cube associated with T_{ij} which contains E_{ij}. If k is an integer such that $C \cap T_{ik} \neq \emptyset$, let $T(C)_{ik}$ be T_{ik}.

Disks A_{ij} are now selected in $T(C)_{ij}$ in the following way:

(1) If $T(C)_{ij} = T_{ij}$, let $A(C)_{ij}$ be A_{ij}.

(2) If $T(C)_{ij}$ is a cube associated with T_{ij}, let $A(C)_{ij}$ be E_{ij}.

Suppose that i is an integer such that $T(C)_i$ is a cube associated with T_i. In this case $A(C)_i$ is E_i, and the disk $A(C)_i$ will be left alone during all successive approximations and will lie in the disk $D(C)$. In order to preserve consistent notation, $A(C)_i$ may be subdivided into fifteen subdisks $E(C)_{i1}, E(C)_{i2}, \cdots$, and $E(C)_{i15}$; these are thickened slightly to form 3-cells $T(C)_{i1}, T(C)_{i2}, \cdots$, and $T(C)_{i15}$. In this case $A(C)_{ij}$ is $E(C)_{ij}$.

Let $W(C)_2$ be $\bigcup_{i=1}^{2} (\bigcup_{j=1}^{15} T(C)_{ij})$ and let $D(C)_2$ be $\bigcup_{i=1}^{2} (\bigcup_{j=1}^{15} A(C)_{ij})$. The 3-manifold-with-boundary $W(C)_2$ and the disk $D(C)_2$ are second approximations to the disk $D(C)$.

This process is continued, resulting in a sequence $W(C)_1, W(C)_2, \cdots$ of 3-manifolds-with-boundary and a sequence $D(C)_1, D(C)_2, \cdots$ of disks. The disk $D(C)$ is $\bigcap_{i=1}^{\infty} W(C)_i$ or $\lim D(C)_i$. The same argument which is used to show that Example 2 of [3] is a 2-sphere can be used to show that $D(C)$ is a disk. Since, for each i, $C \subset W(C)_i$, it follows that $C \subset D(C)$.

PROPOSITION 2.3. *For each proper closed subset C of D, the simple closed curve J of Figure 2 can be shrunk to a point in $E^3 - D(C)$.*

Proof. There is an integer n and a cube-with-eye-bolt T_n at the nth stage in the construction of D such that $T_n \cap C = \emptyset$. Let k be $\min\{n$; there is a cube-with-eye-bolt T_n at the nth stage such that $T_n \cap C = \emptyset\}$. Let T_k be a cube-with-eye-bolt at the k th stage such that $T_k \cap C = \emptyset$. Then $T(C)_k$ is a cube associated with T_k. Without loss of generality it may be assumed that $T_k \subset T_1$.

It follows from Theorem 4 of [3] that there is a cube K associated with T_1 such that $T(C)_k \subset K$ and K contains every cube-with-eye-bolt at the kth stage

in the construction of D with the exception of T_k. Hence $D(C) \subset K \cup T_2$. It follows from the proof of Theorem 3 of [3] that there is a tame cube W in $E^3 - J$ such that $K \cup T_2 \subset W$. Since $E^3 - W$ is simply connected, J can be shrunk to a point in $E^3 - W$, and therefore J can be shrunk to a point in $E^3 - D(C)$.

PROPOSITION 2.4. *If C is a proper closed subset of D then C lies on a 2-sphere in E^3.*

Proof. Let A be a polyhedral annulus such that $\operatorname{Bd} A = \operatorname{Bd} D(C) \cup J$ and $A \cap D = \operatorname{Bd} D(C)$. Such an annulus may be constructed in $(E^3 - W_1) \cup \operatorname{Bd} D(C)$. Since, by Proposition 2.3, J can be shrunk to a point in $E^3 - D(C)$, it follows from Theorem 1 that there exists a 2-sphere S in E^3 such that $D(C) \subset S$. Since $C \subset D(C)$, $C \subset S$, and this establishes Proposition 2.4.

PROPOSITION 2.5. *Every arc on D is tame.*

Proposition 2.5 can be established using either the method in [3] or in [8].

EXAMPLE 3. *A disk D such that* $\operatorname{Bd} D$ *can be shrunk to a point in* $E^3 - \operatorname{Int} D$ *but D does not lie on a 2-sphere in E^3*

DESCRIPTION. Let D_0 be a horizontal disk in E^3. D is obtained from D_0 as follows: remove a sequence of circular disks in $\operatorname{Int} D_0$ which converge to a point p of $\operatorname{Bd} D_0$; add back a sequence $H_1, H_2, \cdots$ of disks with one handle in such a way that (i) H_1 goes down and around the boundary of D_0, (ii) for each i, the handle of H_i loops the stem of H_{i+1}, and (iii) $H_1, H_2, \cdots$ converges to p; finally, for each i, a cylinder is removed from the handle of H_i and is replaced by a pair of Alexander hooked disks [1]. See Figures 4 and 5.

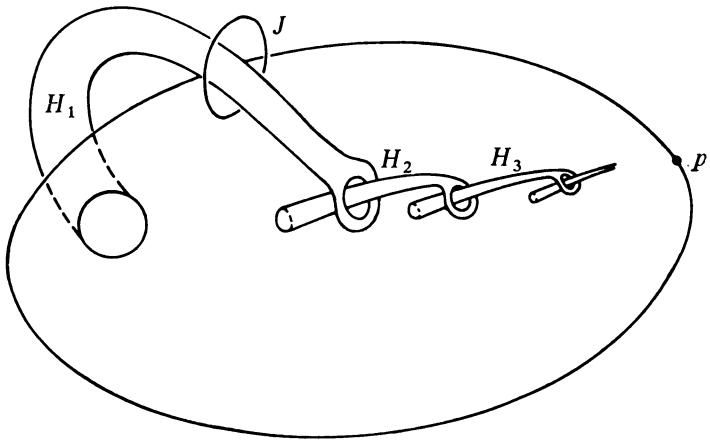

FIGURE 4

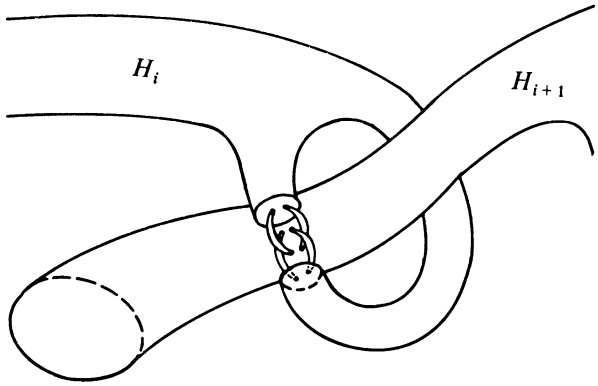

FIGURE 5

PROPOSITION 3.1. *The simple closed curve J of Figure 4 cannot be shrunk to a point in $E^3 - D$.*

Proof. Proposition 3.1 follows from a repeated application of Theorems 9 and 11 of [3].

PROPOSITION 3.2. *The disk D of Example 3 does not lie on any 2-sphere in E^3.*

Proof. Let A be a polyhedral annulus such that $A \cap D = \operatorname{Bd} D$ and $\operatorname{Bd} A = \operatorname{Bd} D \cup J$. Since J cannot be shrunk to a point in $E^3 - D$, $D \cup A$ does not lie on a 2-sphere and it follows from Theorem 2 that D does not lie on a 2-sphere.

PROPOSITION 3.3. *The simple closed curve J of Figure 4 can be shrunk to a point in $E^3 - \operatorname{Int} D$.*

Proof. Let J bound a disk D_1 which extends over the right end of H_1 and which intersects the stem of H_2 in two simple closed curves J_1 and J_2, one above the loop of H_1 and one below the loop of H_1. Now D_1 can be adjusted to obtain a disk D_2 which extends over the right end of H_2 and which intersects the stem of H_3 in four simple closed curves. D_1 is adjusted by replacing the two subdisks on D_1 bounded by J_1 and J_2 by disks which extend over the right end of H_2. In a similar way D_2 may be adjusted to obtain a disk D_3 which extends over the right end of H_3.

Continuing this process a sequence $D_1, D_2, \cdots$ of disks is obtained. D_{i+1} is obtained from D_i by replacing 2^i small subdisks on D_i.

Now there is a continuous map f of a standard 2-simplex s onto $\lim D_i$ such that f carries $\operatorname{Bd} s$ homeomorphically onto J. Since $(\lim D_i) \cap \operatorname{Int} D = \emptyset$, it follows that J can be shrunk to a point in $E^3 - \operatorname{Int} D$.

PROPOSITION 3.4. $\operatorname{Bd} D$ *can be shrunk to a point in* $E^3 - \operatorname{Int} D$.

Proof. This follows from Proposition 3.3 and the fact that $\mathrm{Bd}\, D$ and J are homotopic in $E^3 - \mathrm{Int}\, D$.

References

1. J. W. Alexander, *An example of a simply connected surface bounding a region which is not simply connected*, Proc. Nat. Acad. Sci. U.S.A. **10** (1924), 8–10.

2. R. J. Bean, *On subsets of a disk which contain all the wild points of the disk*, Abstract 587–31, Notices Amer. Math. Soc. **8** (1961), 577.

3. R. H. Bing, *A wild surface each of whose arcs is tame*, Duke Math. J. **28** (1961), 1–15.

4. ———, *Approximating surfaces with polyhedral ones*, Ann. of Math. (2) **65** (1957), 456–483.

5. ———, *Each disk in each 3-manifold is pierced by a tame arc*, Abstract 559–114, Notices Amer. Math. Soc. **6** (1959), 510.

6. ———, *Locally tame sets are tame*, Ann. of Math. (2) **59** (1954), 145–158.

7. R. H. Fox, and E. Artin, *Some wild cells and spheres in three-dimensional space*, Ann. of Math. (2) **49** (1948), 979–990.

8. D. Gillman, *Note concerning a wild sphere of Bing*, Abstract 584–1, Notices Amer. Math. Soc. **8** (1961), 496.

9. O. G. Harrold, H. C. Griffith and E. E. Posey, *A characterization of tame curves in 3-space*, Trans. Amer. Math. Soc. **79** (1955), 12–34.

10. C. D. Papakyriakopoulos, *On Dehn's lemma and the asphericity of knots*, Ann. of Math. (2) **66** (1957), 1–26.

11. H. Schubert, *Knoten und Vollring*, Acta Math. **90** (1953), 132–286.

State University of Iowa,
Iowa City, Iowa

The Institute for Advanced Study,
Princeton, New Jersey