A SURFACE IN S^3 IS TAME IF IT CAN BE DEFORMED INTO EACH COMPLEMENTARY DOMAIN

BY

JOHN HEMPEL(1)

1. **Introduction.** In [2] R. H. Bing showed that a closed, connected surface M in E^3 is tame if it can be homeomorphically approximated from either side—that is, if for each component U of $E^3 - M$ and each positive number ε there is a homeomorphism of M into U which moves no point as much as ε. This criterion was used in [3] in showing that a closed, connected surface in E^3 is tame if its complement is 1-ULC (uniformally locally simply connected). This result in turn is used in §3 of this paper to show that a closed, connected surface M in E^3 is tame provided that it can be deformed into either of its complementary domains by a homotopy which begins with the identity and at each subsequent stage takes M into its complement. In §4 the following situation is considered. Suppose M is a closed, connected surface which is tamely embedded in S^3 and f is a map of S^3 onto itself which is a homeomorphism relative to M (i.e., $f \mid M$ is a homeomorphism and $f(S^3 - M) = S^3 - f(M)$). In Theorem 2 it is shown that $f(M)$ is tame. In Theorem 3 it is shown that, if in addition M is unknotted (i.e., the closure of each complementary domain is a cube with handles) then $f \mid M$ can be extended to a homeomorphism of S^3 onto itself. In §5 examples are given to show that Theorem 3 fails if M is allowed to be knotted.

Throughout this paper E^n will denote Euclidean n-dimensional space, S^n its one point compactification, and I the unit interval. $H_n(X)$ will denote the n-dimensional singular homology of X with coefficients in the additive group Z of integers.

All manifolds are assumed to be separable metric and without boundary unless otherwise indicated. A *closed manifold* is compact and without boundary. The word surface is used interchangeably with 2-manifold. If M is a manifold with boundary, then $\mathrm{Bd}(M)$ and $\mathrm{Int}(M)$ denote, respectively, the boundary of M and $M - \mathrm{Bd}(M)$. The distance function is denoted by d.

If X is a subset of a triangulated manifold M, then X is said to be *tame* in M if there is a homeomorphism of M onto itself which takes X onto a polyhedron. Otherwise X is said to be *wild*.

A *cube with n handles* is a 3-manifold with boundary which can be obtained

Presented to the Society, January 22, 1962; received by the editors October 5, 1962.

(1) This paper is the substance of the author's Ph. D. thesis which was prepared under the supervision of Professor R. H. Bing at the University of Wisconsin.

from the 3-cell by choosing a collection of $2n$ mutually exclusive disks on its boundary and identifying them in pairs in an orientation preserving way. Two cubes with handles are homeomorphic if and only if they have the same number of handles. The boundary of a cube with n handles is a closed, orientable surface of genus n.

A metric space X is said to be 1-ULC (*uniformally locally simply connected*) if for each positive number ε there is a positive number δ such that if D is a disk and f is a map of $\mathrm{Bd}(D)$ into a subset of X of diameter less than δ then f can be extended to a map of D into a subset of X of diameter less than ε.

A map f is said to be *essential* provided that it is not homotopic to a constant. The restriction of a map f to a subset A of its domain is denoted by $f|A$. If $H: X \times I \to Y$ is a homotopy, we use $H_t: X \to Y$ to denote the map defined by $H_t(x) = H(x,t)$.

2. **Preliminaries.** The following lemmas will be used in the body of this work.

LEMMA 1. *Suppose D and E are polyhedral disks in E^3 such that $D \cap \mathrm{Bd}(E) = E \cap \mathrm{Bd}(D) = 0$. Let η be a non-negative real-valued continuous function defined on E such that for $x \in \mathrm{Int}(E)$, $\eta(x) > 0$. Then there is a piecewise linear homeomorphism h of E^3 onto itself such that for every $x \in E, d(x,h(x)) < \eta(x)$ and such that each component of $D \cap h(E)$ is a simple closed curve in* $\mathrm{Int}(D)$.

Proof. By [10, Theorem 1] there is a piecewise linear homeomorphism h_1 of E^3 onto itself which takes E onto a triangular disk E' in the plane $x_3 = 0$. Let E'' and E''' be subdisks of E' which are concentric with E' such that $E''' \subset \mathrm{Int}(E'') \subset E'' \subset \mathrm{Int}(E')$ and such that $h_1(D \cap E) \subset \mathrm{Int}(E''')$. Let $\varepsilon = \min\{\eta(x); x \in h_1^{-1}(E'')\}$. Note that $\varepsilon > 0$. There is a positive number δ such that for $x \in E''$ and $y \in E^3$ with $d(x,y) < \delta$ then $d(h_1^{-1}(x), h_1^{-1}(y)) < \varepsilon$. We also assume that δ is smaller than $d(E'' - E''', h_1(D))$. There is a number $c, 0 < c < \delta$, such that the plane $x_3 = c$ contains no vertex of $h_1(D)$. Let ϕ be the continuous real-valued function defined on the $x_3 = 0$ plane which is 0 outside E'', c on E''', and which is linear on the segment of each ray from the center of E' which lies in $E'' - E'''$. We define $h_2: E^3 \to E^3$ by $h_2(x_1, x_2, x_3) = (x_1, x_2, x_3 + \phi(x_1, x_2))$.

The homeomorphism $h = h_1^{-1} h_2 h_1$ satisfies the conclusion of Lemma 1.

LEMMA 2. *Suppose S is a polyhedral 2-sphere in E^3 and K is a polyhedral disk in E^3 such that $\mathrm{Bd}(K) \cap S = 0$. Then for each $\varepsilon > 0$ there is a piecewise linear homeomorphism h of E^3 onto itself which moves no point as much as ε and such that each component of $K \cap h(S)$ is a simple closed curve in* $\mathrm{Int}(K)$.

The proof of Lemma 2 is a simple variation of the proof of Lemma 1.

LEMMA 3. *Suppose X is a compact continuum in E^n $(n \geqq 2)$ which separates E^n, U is a component of $E^n - X$, and A is a closed set which lies in U. Then there*

is a positive number γ such that if f is any map of X into U which moves no point as much as γ, then $f(X)$ separates A from X in E^n.

Proof. Let S be the unit $(n-1)$-sphere in E^n with center at the origin. For any point $p \in E^n$ let $\pi_p: E^n - \{p\} \to S$ be the map given by $\pi_p(x) = (x-p)/\|x-p\|$. It is a well-known fact that a compact set Y in E^n separates two points p and q in E^n if and only if the maps $\pi_p \mid Y$ and $\pi_q \mid Y$ are not homotopic [7, p. 97].

We suppose without loss of generality that A is connected.

Take $p \in A$ and let q be a point of some component of $E^n - X$ other than U. Let γ be a positive number less than $d(X, A \cup \{q\})$.

Now suppose f is a map of X into U which moves no point as much as γ. Note that there may be no such map, in which case the lemma is vacuously satisfied. We first show that $f(X)$ separates p from q in E^n. Suppose not; then the maps $\pi_p \mid f(X)$ and $\pi_q \mid f(X)$ are homotopic. That is, there is a homotopy $\phi: f(X) \times I \to S$ such that $\phi(y,0) = \pi_p(y)$ and $\phi(y,1) = \pi_q(y)$. We define a homotopy $\psi: X \times I \to S$ by:

$$\psi(x,t) = \begin{cases} \pi_p((1-3t)x + 3tf(x)), & 0 \leqq t \leqq 1/3, \\ \phi(f(x), 3t-1), & 1/3 \leqq t \leqq 2/3, \\ \pi_q((3t-2)x + (3-3t)f(x)), & 2/3 \leqq t \leqq 1. \end{cases}$$

Now ψ is a homotopy connecting $\pi_p \mid X$ and $\pi_q \mid X$ contrary to the fact that X separates p from q in E^n. Thus $f(X)$ must separate p from q in E^n. Since A is connected and $f(X) \cap A = 0$, $f(X)$ separates A from q. Finally, since $f(X) \subset U$ and X is connected, q and X must lie in the same component of $E^n - f(X)$. Thus $f(X)$ separates A from X in E^n.

Before proceeding with the next lemma, we give a definition of the Brouwer degree of a map. If M^n and N^n are closed, connected, orientable, n-manifolds then $H_n(M^n) = Z$ and $H_n(N^n) = Z$. If f is a map of M^n into N^n then f induces a homomorphism $f^*: H_n(M^n) \to H_n(N^n)$. The integer $f^*(1)$ is called the *Brouwer degree* of f. If $M^n = N^n = S^n$, then f is essential if and only if the degree of f is different from 0 [5, p. 304].

LEMMA 4. *Suppose L is a straight line in E^3, D is a disk, and f is a map of* $\mathrm{Bd}(D \times I) = [\mathrm{Bd}(D) \times I] \cup [D \times \mathrm{Bd}(I)]$ *into E^3 such that for every $t \in I$, $f \mid (\mathrm{Bd}(D) \times t)$ is an essential map of the simple closed curve* $\mathrm{Bd}(D) \times t$ *into $E^3 - L$. Suppose further that r is a point of L such that $f(D \times 0) \cap L_1 = f(D \times 1) \cap L_0 = 0$, where L_0 and L_1 are the closures of the components of $L - r$. Then f is an essential map of the 2-sphere* $\mathrm{Bd}(D \times I)$ *into $E^3 - r$.*

Proof. Let R be the unit 2-sphere with center at r. Let q_0 and q_1 be the points $L_0 \cap R$ and $L_1 \cap R$, respectively. Let ϕ be the radial retraction of $E^3 - r$ onto R (that is, $\phi(x) = r + (x-r)/\| x - r \|$).

We note that for any $t \in I$, $f \mid (\mathrm{Bd}(D) \times t)$ is homotopic to $\phi f \mid (\mathrm{Bd}(D) \times t)$ in $E^3 - L$. In particular, $\phi f \mid (\mathrm{Bd}(D) \times t)$ is not homotopic to a constant in $R - (q_0 \cup q_1)$. Furthermore, since $\phi^{-1}(q_0) \subset L_0$ and $f(D \times 1) \cap L_0 = 0$, it follows that $q_0 \notin \phi f(D \times 1)$. Similarly $q_1 \notin f(D \times 0)$.

We will show that ϕf is an essential map of $\mathrm{Bd}(D \times I)$ onto R. We let B_0 and B_1 be the hemispheres of R whose poles are q_0 and q_1 respectively. We can find a map $g\colon \mathrm{Bd}(D \times I) \to R$ such that

$$g((\mathrm{Bd}(D) \times [0,1/2]) \cap D \times 0) = B_0,$$

$$g((\mathrm{Bd}(D) \times [1/2,1]) \cup D \times 1) = B_1,$$

g is homotopic to ϕf on R, and

$g \mid (\mathrm{Bd}(D) \times 1/2)$ is an essential map of

$\mathrm{Bd}(D) \times 1/2$ onto the equator, $B_0 \cap B_1$, of R.

We can obtain g as follows. Let C_0 and C_1 be mutually exclusive disks on R such that $q_i \in \mathrm{Int}(C_i) \subset C_i \subset \mathrm{Int}(B_i)$, $C_0 \cap \phi f(\mathrm{Bd}(D) \times [1/2,1] \cup D \times 1) = 0$, and $C_1 \cap \phi f(\mathrm{Bd}(D) \times [0,1/2] \cup D \times 0) = 0$. There is a map $\psi\colon R \to R$ which expands C_i onto B_i and shrinks $R - (C_0 \cup C_1)$ onto $B_0 \cap B_1$. We can choose ψ so that it is homotopic to the identity by a homotopy which at each stage is fixed on $q_0 \cup q_1$ and takes $R - (q_0 \cup q_1)$ onto itself. The map $g = \psi\phi f$ will have the desired properties. Now g takes the hemispheres $(\mathrm{Bd}(D) \times [0,1/2]) \cup (D \times 0)$ and $(\mathrm{Bd}(D) \times [1/2,1]) \cup (D \times 1)$ of $\mathrm{Bd}(D \times I)$, respectively, onto the hemispheres B_0 and B_1 of R. Hence by [5, p. 304] it follows that the Brouwer degree of g is the same as the Brouwer degree of $g \mid (\mathrm{Bd}(D) \times 1/2)$. Since $g \mid (\mathrm{Bd}(D) \times 1/2)$ is an essential map of $\mathrm{Bd}(D) \times 1/2$ onto $B_0 \cap B_1$, g, and therefore ϕf, is an essential map of $\mathrm{Bd}(D \times I)$ onto R.

Finally, f is not homotopic to a constant in $E^3 - r$; for if $H\colon \mathrm{Bd}(D \times I) \times I \to E^3 - r$ were a homotopy connecting f and a constant map, then $\phi H\colon \mathrm{Bd}(D \times I) \times I \to R$ would be a homotopy connecting ϕf and a constant map contrary to the fact that ϕf is essential. This completes the proof of Lemma 4.

3. **Conditions under which a surface is tame.** It is a well-known fact that a tamely embedded surface can be deformed into either of its complementary domains (in fact, it will have a cartesian product neighborhood). The purpose of this section is to show that the converse is also true. We state this result as follows.

THEOREM 1. *Suppose M is a closed, connected 2-manifold in E^3 with the property that for each component U of $E^3 - M$ there is a homotopy $h\colon M \times I \to \bar{U}$ such that $h(x,0) = x$ and $h(x,t) \in U$ for $t > 0$. Then M is tamely embedded in E^3.*

Proof. Bing has shown [3] that M is tame if $E^3 - M$ is 1-ULC. Actually, the proof given in [3] does not use the full strength of this hypothesis but only the seemingly weaker condition:

CONDITION A. For each component U of $E^3 - M$ and each $\varepsilon > 0$, there is a number $\delta > 0$ such that each polyhedral unknotted simple closed curve in U of diameter less than δ can be shrunk to a point in U on a set of diameter less than ε.

We will prove Theorem 1 by showing that Condition A is satisfied.

Suppose that U is a component of $E^3 - M$ and $h: M \times I \to \bar{U}$ is the homotopy promised by the hypothesis of Theorem 1. Let $\varepsilon > 0$ be given. There is a number $\eta > 0$ such that any subset of M of diameter less than η lies in a disk in M of diameter less than $\varepsilon/2$. Take $\delta > 0$ so that any polyhedral unknotted simple closed curve in U of diameter less than δ bounds a polyhedral disk in E^3 of diameter less than $\eta/3$. We will show that δ satisfies the requirements of Condition A.

Suppose J is a polyhedral unknotted simple closed curve in U of diameter less than δ. Then J bounds a polyhedral disk K in E^3 of diameter less than $\eta/3$. We can choose t_0 small enough that for $0 < t < t_0, h_t(M)$ separates M from J in E^3. The existence of t_0 is justified by Lemma 3. We may, in addition, suppose that for $0 < t < t_0, d(x, h_t(x)) < \eta/3$; hence the set $\bigcup_{0 \leqq t \leqq t_0} h_t^{-1}(h_t(M) \cap K)$ has diameter less than η and thus lies in a disk E in M of diameter less than $\varepsilon/2$. Note that for $0 < t < t_0$, $h_t(E)$ separates J from $K \cap M$ on K. Let F be a disk on M such that $E \subset \mathrm{Int}(F)$ and diameter $(F) < \varepsilon/2$.

It follows from [4] that M can be pierced by a tame arc A at a point x_0 of $\mathrm{Int}(E)$. We denote A by px_0q where $p \in U$ and $q \in E^3 - \bar{U}$. There is a homeomorphism k of E^3 onto itself which takes A onto a straight line interval A'. Let L' be the straight line obtained by extending A', and let $L = k^{-1}(L)$. Now L may intersect E at points other than x_0; however there is a subdisk D of E which contains x_0 in its interior and such that $D \cap L = x_0$. In particular, $\mathrm{Bd}(D)$ cannot be shrunk to a point in $E^3 - L$. We choose $t_1 (0 < t_1 < t_0)$ with the following properties:

(i) $h(\mathrm{Bd}(F) \times [0, t_1]) \cap h(E \times [0, t_1]) = 0$;

(ii) $h(D \times [0, t_1]) \cap \overline{L - A} = 0$;

(iii) $h(\overline{(F - D)} \times [0, t_1]) \cap A = 0$;

(iv) for $0 \leqq t \leqq t_1, h_t(\mathrm{Bd}(D))$ is not homotopic to a constant in $E^3 - L$.

Note that (iv) is actually a consequence of (ii), (iii), and the fact that $\mathrm{Bd}(D)$ cannot be shrunk to a point in $E^3 - L$.

There is a point p_1 of $A \cap U$ such that the subarc pp_1 of A contains $h_{t_1}(D) \cap L$. The existence of p_1 is justified by (ii). Figure 1 illustrates the construction we are making.

By Lemma 3 we choose t_2 $(0 < t_2 < t_1)$ so that $h_{t_2}(M)$ separates M from $h_{t_1}(M) \cup pp_1$ in E^3. There is a point p_2 of $A \cap U$ such that the subarc pp_2 of A contains $(h_{t_1}(D) \cup h_{t_2}(D)) \cap L$. Choose t_3 $(0 < t_3 < t_2)$ so that $h_{t_3}(M)$ separates M from $h_{t_2}(M) \cup pp_2$ in E^3.

Now let f be the map $h \mid \mathrm{Bd}(D \times [t_3, t_1])$, where $\mathrm{Bd}(D \times [t_3, t_1]) = \mathrm{Bd}(D) \times [t_3, t_1] \cup D \times t_3 \cup D \times t_1$. Let r be a point of $h_{t_2}(D) \cap L$. Note that

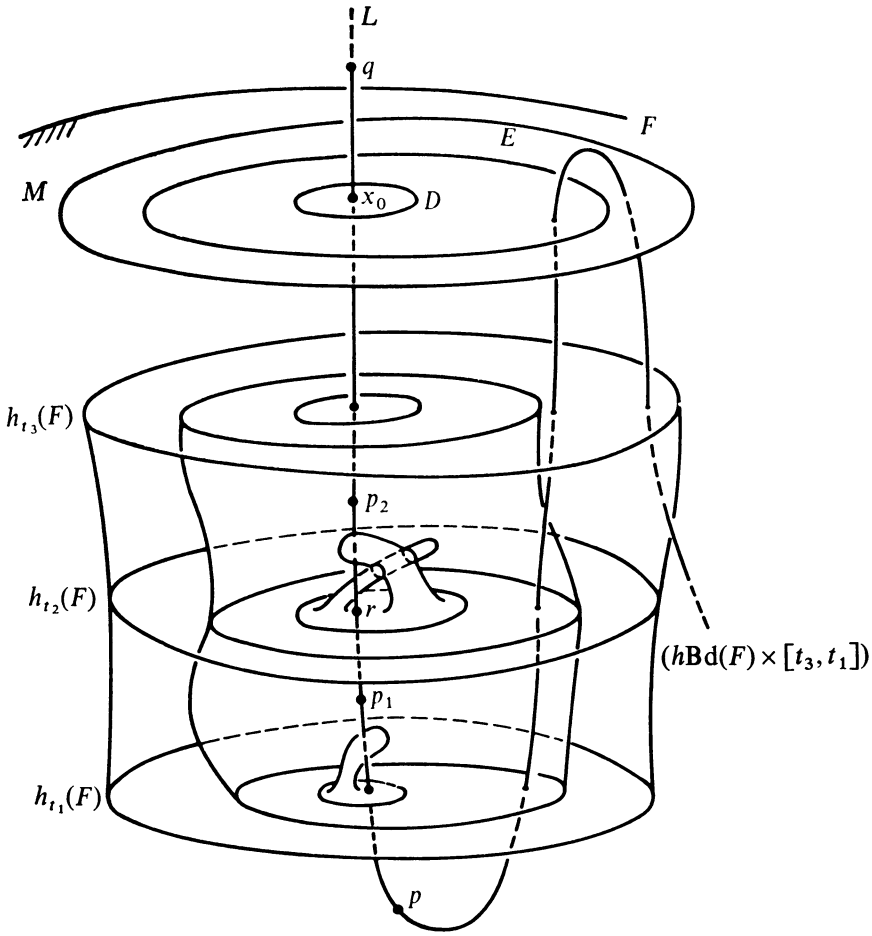

FIGURE 1

$h_{t_2}(D) \cap L$ is nonempty since $h_{t_2} \mid \mathrm{Bd}(D)$ is not homotopic to a constant in $E^3 - L$. Let L_0 and L_1 be the closures of the components of $L - r$ containing p and q respectively.

Now $f(D \times t_1) \cap L = h_{t_1}(D) \cap L \subset pp_1 \subset L_0 - r$, and $f(D \times t_3) \cap L = h_{t_3}(D) \cap L \subset p_2 x_0 \subset L_1 - r$; so $f(D \times t_1) \cap L_1 = 0$ and $f(D \times t_3) \cap L_0 = 0$. This, together with (iv), gives us the hypothesis of Lemma 4. Although L is not a straight line, it is taken onto the straight line L' by the space homeomorphism k; thus Lemma 4 applies here and we obtain the result that f is not homotopic to a constant in $E^3 - r$.

Let g be the map $h \mid \mathrm{Bd}(F \times [t_3, t_1])$. We wish to show that g is not homotopic to a constant in $E^3 - r$. To see this, let $\theta' : D \times I \to F$ be an isotopy with the properties that:

$$\theta'(x,0) = x;$$

$$\theta'(x,s) \in \overline{F - D} \text{ for } x \in \mathrm{Bd}(D) \text{ and } s \in I; \text{ and}$$

$$\theta'_1 \text{ is a homeomorphism of } D \text{ onto } F.$$

Now θ' induces an isotopy $\theta\colon \mathrm{Bd}(D \times [t_3,t_1]) \times I \to F \times [t_3,t_1]$ given by

$$\theta((x,t),s) = (\theta'(x,s),t);\ (x,t) \in \mathrm{Bd}(D \times [t_3,t_1]),\ s \in I.$$

We define a homotopy $H\colon \mathrm{Bd}(D \times [t_3,t_1]) \times I \to E^3$ by $H(y,s) = h(\theta(y,s))$; $y \in \mathrm{Bd}(D \times [t_3,t_1]), s \in I$. Note that $H(y,0) = f(y)$ and $H(y,1) = g(\theta_1(y))$; furthermore $\theta(\mathrm{Bd}(D \times [t_3,t_1]) \times I) \subset (\overline{F - D}) \times [t_3, t_1] \cup F \times t_3 \cup F \times t_1$, while, by (iii), $h((\overline{F - D}) \times [t_3,t_1] \cup F \times t_3 \cup F \times t_1) \cap r = 0$. Hence H maps into $E^3 - r$. Now suppose g is homotopic to a constant in $E^3 - r$; that is, there is a homotopy $\phi\colon \mathrm{Bd}(F \times [t_3,t_1]) \times I \to E^3 - r$ such that $\phi(y,0) = g(y)$ and ϕ_1 is a constant map. We define a homotopy $\psi\colon \mathrm{Bd}(D \times [t_3,t_1]) \times I \to E^3 - r$ by

$$\psi(y,s) = \begin{cases} H(y,2s), & 0 \leqq s \leqq 1/2, \\ \phi(\theta_1(y), 2s-1), & 1/2 \leqq s \leqq 1. \end{cases}$$

Now $\psi(y,0) = f(y)$ and ψ_1 is a constant map. This gives the contradiction that f is homotopic to a constant in $E^3 - r$, and thus shows that g is not homotopic to a constant in $E^3 - r$.

Now $r \in h_{t_2}(E)$ and by (i) $g(\mathrm{Bd}(F \times [t_3,t_1])) \cap h_{t_2}(E) = 0$; thus it follows that g is not homotopic to a constant in $E^3 - h_{t_2}(E)$. In particular, g is not homotopic to a constant in $U - h_{t_2}(E)$. Thus g is an essential map of the 2-sphere $\mathrm{Bd}(F \times [t_3,t_1])$ into the 3-manifold $U - h_{t_2}(E)$. It follows from the sphere theorem [9] that there is a polyhedral 2-sphere S in $U - h_{t_2}(E)$ which cannot be shrunk to a point in $U - h_{t_2}(E)$. It follows from the proof of the sphere theorem as given by Papakyriakopoulos that S may be chosen to lie in any preassigned neighborhood of $g(\mathrm{Bd}(F \times [t_3,t_1]))$. Now diameter $(F) < \varepsilon/2$ and for $t \leqq t_1$, $d(x,h_t(x)) < \eta/3$. Hence we may suppose that diameter $(S) < 5\varepsilon/6$, that $S \cap J = 0$, and, in light of Lemma 2, that each component of $S \cap K$ is a simple closed curve.

Since $\mathrm{Bd}(U) = M$ is connected and $S \cap M = 0$, M lies in a component of $E^3 - S$. We may suppose that ε was chosen smaller than the diameter of M so that M must lie in the unbounded component of $E^3 - S$. Thus the bounded component of $E^3 - S$ lies in U. Since S cannot be shrunk to a point in $U - h_{t_2}(E)$, and since $h_{t_2}(E)$ is connected, it follows that $h_{t_2}(E)$ lies in the bounded component of $E^3 - S$. Then S must separate J from $M \cap K$ on K; for if not there is an arc B from J to M in $K - S$. In this case B must lie in the unbounded component of $E^3 - S$ since M is in this component. But then B misses $h_{t_2}(E)$ contrary to the fact that $h_{t_2}(E)$ separates J from $M \cap K$ on K. Figure 2 illustrates the situation that we have obtained.

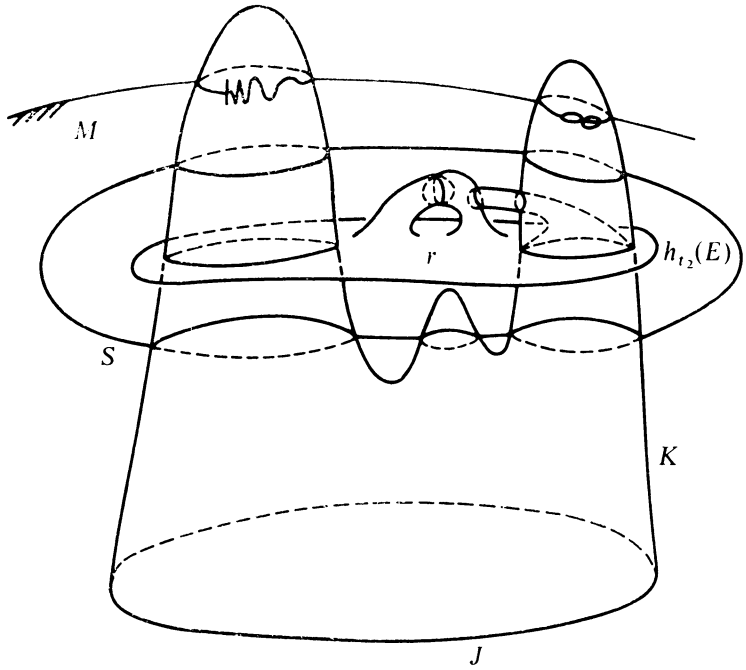

FIGURE 2

Let K' be the closure of the component of $K - S$ which contains J. Then $K' \subset U$ and each component of $K' \cap S$ is a simple closed curve. Each of these simple closed curves can be shrunk to a point in S; hence J can be shrunk to a point in $K' \cup S \subset U$. Finally, diameter $(K' \cup S) < \eta/3 + 5\varepsilon/6 < \varepsilon$. Thus we have shown that J can be shrunk to a point in U on a set of diameter less than ε; hence Condition A is satisfied and the proof of Theorem 1 is complete.

QUESTION. Is the full hypothesis of Theorem 1 required? For example, if M is a closed, connected 2-manifold in E^3 such that for each component U of $E^3 - M$ and each positive number ε there is a map of M into U that moves no point as much as ε, is M necessarily tame? It can be shown under these conditions that the complement on M is "nice." So if, for example, M is a 2-sphere, then the components of $E^3 - M$ are an open 3-cell and an open 3-cell minus a point, respectively. However, it is known (see [6, Example 3.2] for example) that this is not enough to insure that M is tame.

All example of wild surfaces known to the author have the property that there is a component U of $E^3 - M$, a number $\delta > 0$, a sequence $\{J_i\}$ of simple closed curves on M with $\lim(\text{diameter}(J_i)) = 0$, and a sequence $\{\eta_i\}$ of positive numbers such that any simple closed curve in U which is homeomorphically within η_i of J_i cannot be shrunk to a point in U on a set of diameter less than δ. A surface satisfying the hypothesis of the above question cannot have this property.

4. The image of a tame surface under a relative homeomorphism.

THEOREM 2. *Suppose M is a closed, connected 2-manifold which is tamely embedded in E^3 and f is a map of E^3 onto itself such that $f \mid M$ is a homeomorphism and $f(E^3 - M) = E^3 - f(M)$. Then $f(M)$ is tamely embedded in E^3.*

Proof. Let $M' = f(M)$ and U' be a component of $E^3 - M'$. Let U and V be the components of $E^3 - M$. By assumption neither $f(U)$ nor $f(V)$ intersect M'. Since each of $f(U)$ and $f(V)$ is connected they must each lie in some component of of $E^3 - M'$. Since f maps onto E^3, these sets must be the components of $E^3 - M'$. We suppose that the notation is chosen so that $f(U) = U'$.

Since M is tame, it has a cartesian product neighborhood [8, Lemma 1]. That is, there is a homeomorphism $g: M \times [-1,1] \to E^3$ such that $g(x,0) = x$ for each $x \in M$. We suppose that $g(M \times (0,1]) \subset U$. We define a homotopy $h: M' \times I \to \bar{U}'$ by $h(y,t) = f(g(f^{-1}(y),t))$, $y \in M'$, $t \in I$. Then $h(y,0) = y$ for every $y \in M'$ and for $t > 0$, $h(y,t) \in U'$. Thus the hypothesis of Theorem 1 is satisfied, and we conclude that M' is tame.

COROLLARY. *The same result holds if we replace the hypothesis that f be an onto map by the assumption that $f(U)$ and $f(V)$ lie in different components of $E^3 - M'$, where U and V are the components of $E^3 - M$.*

The proof is the same as that of Theorem 2.

Theorems 1 and 2 were stated for E^3, although they obviously remain valid for the 3-sphere S^3. The following theorem is stated in terms of S^3 since it has a more symmetric form in this setting.

It is a well-known fact that if M and M' are tamely embedded 2-spheres in S^3, then any homeomorphism of M onto M' can be extended to a homeomorphism of S^3 onto itself. The corresponding statement is clearly false for surfaces of positive genus. The following theorem shows that by placing some restrictions both as to the placement of M in S^3 and as to the nature of the homeomorphism of M onto M' that this result can be generalized to closed, connected surfaces of any genus.

THEOREM 3. *Suppose M is a closed, connected, tame 2-manifold in S^3 such that the closure of each component of $S^3 - M$ is a cube with handles. If f is a map of S^3 onto itself such that $f \mid M$ is a homeomorphism and $f(S^3 - M) = S^3 - f(M)$, then $f \mid M$ can be extended to a homeomorphism of S^3 onto itself.*

Proof. It follows by Theorem 2 that $f(M)$ is tame. We assume without loss of generality that M and $M' = f(M)$ are polyhedra.

Let U be a component of $S^3 - M$. As was noted in the proof of Theorem 2, $f(U)$ is a component of $S^3 - M'$. We denote this component by U'. Now $\bar{U}$ is a polyhedral cube with handles whose boundary is M. We will obtain an extension

of $f \mid M$ to a homeomorphism F_1 of $\bar{U}$ onto $\bar{U}'$. Similarly we will obtain an extension of $f \mid M$ to a homeomorphism F_2 taking $\bar{V}$ onto $\bar{V}'$ (where $V = S^3 - \bar{U}$ and $V' = S^3 - \bar{U}$). The map F given by $F(x) = F_1(x), x \in \bar{U}$, and $F(x) = F_2(x)$, $x \in \bar{V}'$, will be the desired homeomorphism of S^3 onto itself. Thus the proof of Theorem 3 will be completed by the following theorem.

THEOREM 4. *Suppose C and C' are polyhedral 3-manifolds with boundary in S^3 such that C is a cube with handles and such that there is a map f of C onto C' which takes* $\mathrm{Bd}(C)$ *homeomorphically onto* $\mathrm{Bd}(C')$. *Then C and C' are homeomorphic; in particular, $f \mid \mathrm{Bd}(C)$ can be extended to a homeomorphism of C onto C'.*

Proof. Let C be of genus n. Then C is the union of a polyhedral cube C_0 and n mutually exclusive polyhedral cubes $C_1, C_2, \cdots, C_n$ such that $C_i \cap C_0$ consists of two mutually exclusive polyhedral disks, D_{i1} and D_{i2}, on the boundary of each. Note that

$$\mathrm{Bd}(C) = \mathrm{Bd}(C_0) \cup \cdots \cup \mathrm{Bd}(C_n) - (\mathrm{Int}(D_{11}) \cup \mathrm{Int}(D_{12}) \cup \cdots \cup \mathrm{Int}(D_{n2})),$$

and that $D_{ij} \cap \mathrm{Bd}(C) = \mathrm{Bd}(D_{ij})$. We break the proof into several steps.

STEP 1. First we note a well-known property of n-cells. If K and K' are two n-cells and f is a homeomorphism of $\mathrm{Bd}(K)$ onto $\mathrm{Bd}(K')$, then f can be extended to a homeomorphism of K onto K'.

STEP 2. It follows from [8, Lemma 1] that there is a piecewise linear homeomorphism $g: \mathrm{Bd}(C') \times I \to C'$ such that $g(x,0) = x$ for every $x \in \mathrm{Bd}(C')$. To simplify notation we will suppose that $\mathrm{Bd}(C') \times I$ is embedded in C' and we will denote the point $g(x,t)$ simply by (x,t).

Since g is piecewise linear, $P \times I$ will be a polyhedron in C' whenever P is a polyhedron in $\mathrm{Bd}(C')$. We define a homeomorphism ϕ of C' into C' by

$$\phi(y) = \begin{cases} (x, 1/2 + 1/2t), & y = (x,t) \in \mathrm{Bd}(C') \times I, \\ y, & y \in C' - \mathrm{Bd}(C') \times I. \end{cases}$$

The effect of ϕ is to shrink C' onto a polyhedral manifold contained in $\mathrm{Int}(C')$.

STEP 3. Let $J_{ij} = \mathrm{Bd}(D_{ij})$ and $J'_{ij} = f(J_{ij})$. We show that there is no loss of generality in assuming that each J'_{ij} is a polygon. Let A be an annular neighborhood of J'_{11} on $\mathrm{Bd}(C')$ which does not intersect any other J'_{ij} and such that J'_{11} circles A exactly once. There is a polygonal simple closed curve K_{11} in $\mathrm{Int}(A)$ which circles A exactly once and which contains at least two points p_1 and p_2 in common with J'_{11}. Let L_1 and L_2 be the components of $\mathrm{Bd}(A)$. Let s_1 and s_2 be two points of L_1, and let t_1 and t_2 be two points of L_2. Now $A - J'_{11}$ has two components and the closure of each is an annulus. Thus there is an arc α_1 from s_1 to t_1 such that $\mathrm{Int}(\alpha_1) \subset \mathrm{Int}(A)$ and $\alpha_1 \cap J'_{11} = p_1$. Similarly there is an arc α_2 from s_2 to t_2 such that $\mathrm{Int}(\alpha_2) \subset \mathrm{Int}(A) - \alpha_1$ and $\alpha_2 \cap J'_{11} = p_2$. In the same

fashion there is a polygonal arc β_1 from s_1 to t_1 such that $\mathrm{Int}(\beta_1) \subset \mathrm{Int}(A)$ and $\beta_1 \cap K_{11} = p_1$. By constructing β_1 so as to circle A an appropriate number of times near $\mathrm{Bd}(A)$, we can insure that the simple closed curve

$$\beta_1 \cup [(s_1 \cup t_1) \times I] \cup [\alpha_1 \times 1]$$

can be shrunk to a point in $A \times I$. There is a polygonal arc β_2 from s_2 to t_2 such that $\mathrm{Int}(\beta_2) \subset \mathrm{Int}(A) - \beta_1$ and such that $\beta_2 \cap K_{11} = p_2$. Now $A - (\alpha_1 \cup \alpha_2)$ has two components. Let E_1 and E_2 denote the closures of these components. Similarly, let F_1 and F_2 denote the closures of the two components of $A - (\beta_1 \cup \beta_2)$. We assume the notation is chosen so that $E_i \cap \mathrm{Bd}(A) = F_i \cap \mathrm{Bd}(A)$. There is a homeomorphism h_1 of $\mathrm{Bd}(A) \cup J'_{11} \cup \alpha_1 \cup \alpha_2$ onto $\mathrm{Bd}(A) \cup K_{11} \cup \beta_1 \cup \beta_2$ which is the identity on $\mathrm{Bd}(A)$ and which takes $J'_{11} \cap E_i$ onto $K_{11} \cap F_i$ $(i = 1,2)$. Now $A - (J'_{11} \cup \alpha_1 \cup \alpha_2)$ has exactly four components and the closure of each is a disk. If G is one of these components, then G lies in some E_i and $h_1(\mathrm{Bd}(G))$ bounds a disk in the corresponding F_i. We can apply Step 1 to each such component to extend h_1 to a homeomorphism h_2 of A onto itself which is the identity on $\mathrm{Bd}(A)$ and which takes J'_{11} onto K_{11}. We can extend h_2 by the identity on $(\mathrm{Bd}(A) \times I) \cup (A \times 1)$ to obtain a homeomorphism of $\mathrm{Bd}(A \times I)$ onto itself. It follows from Dehn's lemma [9] that the polygonal simple closed curve $\beta_1 \cup [(s_1 \cup t_1) \times I] \cup [\alpha_1 \times 1]$ bounds a polyhedral disk X_1 whose interior lies in $\mathrm{Int}(A \times I)$. Similarly, $\beta_2 \cup [(s_2 \cup t_2) \times I] \cup [\alpha_2 \times 1]$ bounds a polyhedral disk X_2 whose interior lies in $\mathrm{Int}(A \times I) - X_1$. We can use Step 1 to extend h_2 to map $\alpha_i \times I$ homeomorphically onto X_i. Again applying Step 1 to each component of $A \times I - (\alpha_1 \cup \alpha_2) \times I$ we obtain a homeomorphism h_3 of $A \times I$ onto itself such that $h_3 \mid \mathrm{Bd}(A) = h_2$. Extending by the identity outside $A \times I$, we obtain a homeomorphism of C' onto itself. By repeating this process for each J'_{ij} we obtain a homeomorphism h of C' onto itself with the property that each $h(J'_{ij})$ is a polygon. Now hf satisfies the hypothesis of Theorem 4 and $hf(J_{ij})$ is a polygon. If there is a homeomorphism F of C onto C' which extends $hf \mid \mathrm{Bd}(C)$, then $h^{-1}F$ is a homeomorphism of C onto C' which extends $f \mid \mathrm{Bd}(C)$. This justifies our assumption; we assume without any change in notation that each J'_{ij} is a polygon.

STEP 4. Now f takes D_{ij} onto a singular disk in C' whose boundary is the polygonal simple closed curve J'_{ij}. $f \mid D_{ij}$ can be replaced by a piecewise linear map f_{ij} which agrees with f on J_{ij}. Let $E_{ij} = J'_{ij} \times [0, 1/2] \cup \phi f_{ij}(D_{ij})$, where ϕ is the homeomorphism described in Step 2. Since f_{ij} and ϕ are piecewise linear, E_{ij} is a polyhedral singular disk in C' whose boundary is J'_{ij}. Furthermore E_{ij} has no singularities near its boundary; that is, there is a neighborhood of J'_{ij}, namely $C' - \phi(C')$, which intersects E_{ij} in the annulus $J'_{ij} \times [0,1/2]$. Thus the hypotheses of Dehn's lemma [9] are satisfied. Hence there is a nonsingular polyhedral disk F_{ij} in C whose boundary is J'_{ij}. Since F_{ij} can be chosen to lie in

E_{ij} plus any preassigned neighborhood of its singularities, we may suppose that $F_{ij} \cap \mathrm{Bd}(C') = J'_{ij}$.

STEP 5. Now the F_{ij}'s may intersect one another. We wish to replace each F_{ij} by a disk having the same boundary such that the resulting disks are mutually exclusive.

Let $D'_{11} = F_{11}$. We apply Lemma 1 to F_{12} with $\eta(x) = d(x, \mathrm{Bd}(C'))$ and obtain a piecewise linear homeomorphism h of S^3 onto itself such that $h(F_{12}) \cap \mathrm{Bd}(C') = \mathrm{Bd}(h(F_{12})) = J'_{12}$, and such that each component of $D'_{11} \cap h(F_{12})$ is a simple closed curve in $\mathrm{Int}(D'_{11})$. Let J be an interior (with respect to D'_{11}) simple closed curve in $D'_{11} \cap h(F_{12})$. That is, J bounds a disk D in D'_{11} whose interior contains no points of $h(F_{12})$. Let E be the disk in $h(F_{12})$ bounded by J. Since D'_{11} has a cartesian product neighborhood, the disk $(h(F_{12}) - E) \cup D$ can be pushed to one side of D'_{11} in a neighborhood of D to obtain a new disk whose intersection with D'_{11} has fewer components than does $D'_{11} \cap h(F_{12})$. We can continue this process to obtain a polyhedral disk F'_{12} which does not intersect D'_{11}. F'_{12} is chosen so that $F'_{12} \cap \mathrm{Bd}(C') = \mathrm{Bd}(F'_{12}) = J'_{12}$. We repeat the above process to replace each F_{ij} $(i \geqq 2)$ by a polyhedral disk F'_{ij} which does not intersect D'_{11}.

Let $D'_{12} = F'_{12}$. We repeat the above process to replace each F'_{ij} $(i \geqq 2)$ by a polyhedral disk F''_{ij} which does not intersect D'_{12}. Since $F'_{ij} \cap D'_{11} = 0$, $D'_{11} \cap D'_{12} = 0$, and F''_{ij} can be chosen to lie in F'_{ij} plus any neighborhood of D'_{12}, F''_{ij} may be chosen so as to miss both D'_{11} and D'_{12}. We let $D'_{21} = F''_{21}$. We can continue in this manner to obtain a collection $\{D'_{ij}\}$ of mutually exclusive polyhedral disks in C' such that $D'_{ij} \cap \mathrm{Bd}(C') = \mathrm{Bd}(D'_{ij}) = J'_{ij}$.

STEP 6. We have now divided C' by the D'_{ij}'s just as C is divided by the D_{ij}'s. Let $S'_0 = f(\mathrm{Bd}(C_0) - \bigcup D_{ij}) \cup \bigcup D'_{ij}$, and for $i \geqq 1$ let

$$S'_i = f(\mathrm{Bd}(C_i) - (D_{i1} \cup D_{i2})) \cup D'_{i1} \cup D'_{i2}.$$

Now S'_i $(0 \leqq i \leqq n)$ is a polyhedral 2-sphere. By Alexander's sphere theorem [1], S'_i bounds two 3-cells in S^3. Since $S'_i \cap \mathrm{Bd}(C') \neq 0$, exactly one of these, which we denotes by C'_i, lies in C'; moreover $C' = \bigcup C'_i$, and $\mathrm{Int}(C'_i) \cap \mathrm{Int}(C'_j) = 0$ for $i \neq j$. By Step 1 we can extend $f \mid J_{ij}$ to a homeomorphism g_{ij} taking D_{ij} onto D'_{ij}. This gives us a homeomorphism G of $\bigcup \mathrm{Bd}(C_i)$ onto $\bigcup \mathrm{Bd}(C'_i)$ given by:

$$G(x) = \begin{cases} f(x), & x \in \mathrm{Bd}(C), \\ g_{ij}(x), & x \in D_{ij}. \end{cases}$$

Again by Step 1, $G \mid \mathrm{Bd}(C_i)$ can be extended to a homeomorphism G_i of C_i onto C'_i. The map $F: C \to C'$ given by $F(x) = G_i(x), x \in C_i$, is a homeomorphism of C onto C' with the property that $F \mid \mathrm{Bd}(C) = f \mid \mathrm{Bd}(C)$. This completes the proof of Theorem 4.

5. **Examples.** In this section we construct examples to show that the hypothesis in Theorem 3 that the closure of each component of $S^3 - M$ be a cube

with handles is indeed necessary. This may be given the following interpretation. While Theorem 3 states that it is impossible to take an "unknotted" surface M onto a "knotted" one by a map of S^3 which is a homeomorphism relative to M, it is possible to take a "knotted" surface onto an "unknotted" one. The existence of examples to support this statement is provided by the following theorem.

THEOREM 5. *Let M be a tame torus (genus 1) in S^3 and let M' be a tame unknotted torus in S^3 (that is, the closure of each component of $S^3 - M'$ is a cube with one handle). Then there is a map f of S^3 onto itself such that $f \mid M$ is a homeomorphism of M onto M' and such that $f(S^3 - M) = S^3 - M'$.*

Proof. We assume without loss of generality that M and M' are polyhedra. Let U and V be the components of $S^3 - M$. It follows from [1] that the closure of at least one of these components, say U, is a solid torus (cube with one handle).

We may choose simple closed curves α and β on M which generate $H_1(M)$ and such that α bounds a disk in $\bar{U}$. We consider the following segment of the Mayer-Vietoris sequence of the proper triad $(M;\ \bar{U}, \bar{V})$:

$$H_1(S^3) \leftarrow H_1(\bar{U}) \oplus H_1(\bar{V}) \xleftarrow{\psi} H_1(M) \leftarrow H_2(S^3).$$

Since $H_1(S^3) = H_2(S^3) = 0$, ψ is an isomorphism of $H_1(M)$ onto $H_1(\bar{U}) \oplus H_1(\bar{V})$. Each of $H_1(\bar{U})$ and $H_1(\bar{V})$ is infinite cyclic. Let these groups be generated by a and b, respectively. For any $\gamma \in H_1(M), \psi(\gamma) = (i^*(\gamma), -j^*(\gamma))$, where i and j are the injection maps of M into $\bar{U}$ and $\bar{V}$, respectively. Since $i^*(\alpha) = 0$, we may put $\psi(\alpha) = (0, rb)$ and $\psi(\beta) = (pa, qb)$, where p, q, and r are integers. Since ψ is an isomorphism, it follows that $p = r = 1$. Let γ be a simple closed curve on M which is homologous to $-q\alpha + \beta$. Then $\psi(\gamma) = (a, -qb + qb) = (a, 0)$; so $j^*(\gamma) = 0$. Thus we have found a simple closed curve γ on M which is not homologous to 0 on M (and, hence does not separate M), but which is homologous to 0 in $\bar{V}$. Hence γ bounds an orientable, polyhedral 2-manifold K which lies, except for its boundary, in V.

Let U' and V' be the components of $S^3 - M'$. We may choose simple closed curves α' and β' on M' which generate $H_1(M')$ and so that α' bounds a disk in $\bar{U}'$, and β' bounds a disk in $\bar{V}'$.

There is a homeomorphism f of $\bar{U}$ onto $\bar{U}'$ such that $f(\gamma)$ is homologous to β' on M'. One may obtain f as follows. Let h be any homeomorphism of $\bar{U}$ onto $\bar{U}'$ such that $h(\alpha) = \alpha'$. Such homeomorphisms exist since α and α' bound disks in $\bar{U}$ and $\bar{U}'$, respectively. Then $h(\beta)$ is homologous on M' to a simple closed curve of the form $n\alpha' \pm \beta'$. We suppose the orientation on M' is chosen so that $h(\beta)$ is homologous to $n\alpha' + \beta'$. Since γ is represented by $-q\alpha + \beta$, $h(\gamma)$ is homologous to $(n - q)\alpha' + \beta'$ on M'. Let g be a homeomorphism of $\bar{U}'$ onto itself obtained by cutting $\bar{U}'$ along the disk bounded by α', rotating one of the free ends through $-(n - q)$ rotations, and then rejoining along this disk. Then $f = gh$ will be the

desired homeomorphism. We may assume that α, β, α', and β' are polyhedra, and that f is piecewise linear.

Since $f(\gamma)$ is homologous to β' on M', $f(\gamma)$ bounds a polyhedral disk K' which lies, except for its boundary, in V'. Now by [8, Lemma 1] there is a piecewise linear homeomorphism k of $K \times I$ into $\bar{V}$ such that $k(x,0) = x$, $k(\mathrm{Bd}(K) \times I) \subset M$, and $k(\mathrm{Int}(K) \times I) \subset V$. Let A be the annulus $k(\gamma \times I)$ on M, and let $A' = f(A)$. Let $\gamma_1 = k(\gamma \times 1)$, and let $K_1 = k(K \times 1)$. Figure 3 illustrates this construction in a particular instance.

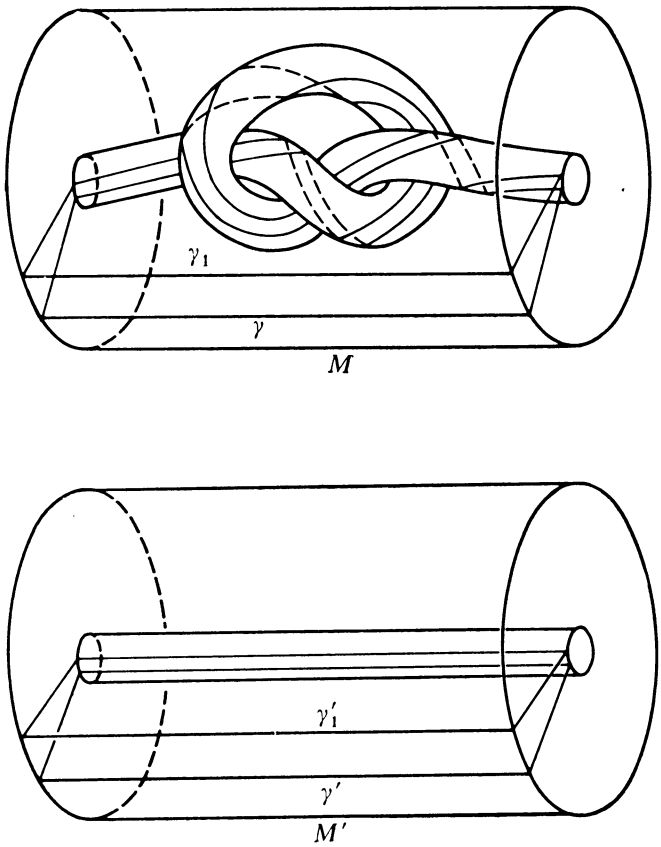

FIGURE 3

Now $f(\gamma_1)$ bounds a polyhedral disk K_1' which lies except for its boundary in V'. By applying the technique of Step 5 of the proof of Theorem 4, we may assume that $K_1' \cap K' = 0$. We can apply the Tietze extension theorem to extend $f \mid \gamma$ to a map of K onto K'. Similarly we can extend $f \mid \gamma_1$ to a map of K_1 onto K_1'. We thus have a map of $\mathrm{Bd}(k(K \times I))$ onto $K' \cup K_1' \cup A'$. Now $K' \cup K_1' \cup A'$ is a polyhedral 2-sphere which bounds a 3-cell C' in $\bar{V}'$. Again by the Tietze

extension theorem, we may extend to get a map, which we continue to denote by f, which takes $k(K \times I)$ onto C'. By the same process we may further extend f to take $\overline{V - k(K \times I)}$ onto the 3-cell $\overline{V' - C'}$. We thus have a map f of S^3 onto itself which takes M homeomorphically onto M', which takes U onto U' and which takes V into $\bar{V}'$. Since both M and M' have cartesian product neighborhoods we can alter the above process in such a way that will insure that f takes V onto V'. Once this is done the resulting map will satisfy the conclusion of Theorem 5.

References

1. J. W. Alexander, *On the subdivision of* 3-*space by polyhedra*, Proc. Nat. Acad. Sci. U.S.A. **10** (1924), 10-19.

2. R. H. Bing, *Conditions under which a surface in* E^3 *is tame*, Fund. Math. **47** (1959), 105–139.

3. ———, *A surface is tame if its complement is* 1-ULC, Trans. Amer. Math. Soc. **101** (1961), 294–305.

4. ———, *Each disk in each* 3-*manifold is pierced by a tame arc*, Amer. Math. Soc. Notices **6** (1959), 510.

5. S. Eilenberg and N. Steenrod, *Foundations of algebraic topology*, Princeton Univ. Press, Princeton, N.J., 1952.

6. Ralph H. Fox and Emil Artin, *Some wild cells and spheres in three-dimensional space*, Ann. of Math. (2) **49** (1948), 979–990.

7. W. Hurewicz and H. Wallman, *Dimension theory*, Princeton Univ. Press, Princeton N. J., 1948.

8. E. E. Moise, *Affine structures in* 3-*manifolds*. V. *The triangulation theorem and Hauptvermutung*, Ann. of Math. (2) **56** (1952), 96–114.

9. C. D. Papakyriakopoulos, *On Dehn's lemma and the asphericity of knots*, Ann. of Math. (2) **66** (1957), 1–26.

10. D. E. Sanderson, *Isotopies in* 3-*manifolds*. I, Proc. Amer. Math. Soc. **8** (1957), 912–922.

University of Wisconsin,
Madison, Wisconsin
Florida State University,
Tallahassee, Florida