TRANSACTIONS OF THE
AMERICAN MATHEMATICAL SOCIETY
Volume 367, Number 9, September 2015, Pages 6063–6083
http://dx.doi.org/10.1090/tran/6172
Article electronically published on April 9, 2015

COUNTING MINIMAL SURFACES IN QUASI-FUCHSIAN THREE-MANIFOLDS

ZHENG HUANG AND BIAO WANG

Abstract. It is well known that every quasi-Fuchsian manifold admits at least one closed incompressible minimal surface, and at most finitely many stable ones. In this paper, for any prescribed integer $N > 0$, we construct a quasi-Fuchsian manifold which contains at least 2^N such minimal surfaces. As a consequence, there exists some simple closed Jordan curve on S^2_∞ such that there are at least 2^N disk-type complete minimal surfaces in $\mathbb{H}^3$ sharing this Jordan curve as the asymptotic boundary.

1. Introduction

Let M^3 be a hyperbolic three-manifold, then we can write $M^3 = \mathbb{H}^3/\Gamma$, where $\mathbb{H}^3$ is hyperbolic three-space, and Γ is a discrete subgroup of $\mathrm{PSL}_2(\mathbb{C})$. The geometry of M^3 is largely determined by the behavior of the action of the discrete group Γ on $\mathbb{S}^2_\infty = \partial\mathbb{H}^3$. When the limit set of Γ is a round circle $\mathbb{S}^1 \subset \mathbb{S}^2_\infty$, then the corresponding three-manifold M^3 is called *Fuchsian*. In this case, M^3 contains a (unique) totally geodesic surface Σ and M^3 is a warped product space $M^3 = \Sigma \times \mathbb{R}$. The moduli space of Fuchsian manifolds (denoted by $\mathcal{F}_g(\Sigma)$) is isometric to Teichmüller space, the space of hyperbolic metrics on the surface Σ under the equivalence induced by the group of diffeomorphisms isotopic to the identity. This space $\mathcal{F}_g(\Sigma)$ is a manifold of dimension $6g - 6$, where $g \geq 2$ is the genus of Σ. In the case when the limit set of Γ lies in a Jordan curve, $M^3 = \mathbb{H}^3/\Gamma$ is called *quasi-Fuchsian*. This is an important class of hyperbolic three-manifolds and M^3 is diffeomorphic to $\Sigma \times \mathbb{R}$, where Σ is a closed surface. The celebrated Simultaneous Uniformization Theorem of Bers ([Ber72]) implies that each quasi-Fuchsian manifold is determined by a pair of Riemann surfaces in Teichmüller space. The space of quasi-Fuchsian manifolds, called the quasi-Fuchsian space, is diffeomorphic to the product of Teichmüller spaces, hence of dimension $12g - 12$.

All surfaces in this paper, when referred to as being contained in a quasi-Fuchsian manifold, are smooth, closed, incompressible and of genus greater than one.

A closed surface embedded in a hyperbolic three-manifold is called *incompressible* if it induces a fundamental group injection. Incompressible surfaces play fundamental roles in the study of hyperbolic three-manifolds ([Has05, Rub07]), and among these surfaces, minimal ones often provide important geometric information about the ambient three-manifolds (see for instance [Rub05]). Analogs of these surfaces and hyperbolic three-manifolds are also central objects to study in anti-de-Sitter geometry (see [KS07] and many others).

Received by the editors September 10, 2012 and, in revised form, February 24, 2013 and April 10, 2013.

2010 *Mathematics Subject Classification.* Primary 53A10; Secondary 57M05.

©2015 American Mathematical Society

In this paper, we investigate counting problems on minimal surfaces in quasi-Fuchsian manifolds. We quickly describe our goal of this work: Any counting problem starts with a (non-)existence theorem. It is a fundamental fact, proved by Schoen-Yau ([SY79]) and Sacks-Uhlenbeck ([SU82]), that any quasi-Fuchsian manifold M^3 contains an area-minimizing immersed incompressible surface and this surface is shown to be embedded by Freedman-Hass-Scott ([FHS83]). Uhlenbeck ([Uhl83]) further considered a subclass of quasi-Fuchsian manifolds which admit a minimal surface of principal curvatures lying in the interval $(-1, 1)$, and such quasi-Fuchsian manifolds are later ([KS07]) called *almost Fuchsian*. She showed, among other results, that any almost Fuchsian manifold contains exactly one minimal surface. Therefore one can parametrize the space of almost Fuchsian manifolds by studying these minimal surfaces (see also [Tau04]), and obtain important information on almost Fuchsian manifolds such as volume of the convex core and Hausdorff dimension of the limit set (see [HW13]), as well as relate these problems to natural metrics on Teichmüller space ([GHW10]). It was expected (see for instance [Uhl83] page 7) that any (fixed) quasi-Fuchsian manifold contains at most finitely many (incompressible) minimal surfaces. This was indeed the case for stable ones as shown by Anderson ([And83]) by the method of geometric measure theory. One of the authors here ([Wan12b]) showed that there exist quasi-Fuchsian manifolds which admit more than one minimal surface. The purpose of this paper is to construct quasi-Fuchsian manifolds that admit arbitrarily many minimal surfaces, or more precisely, to prove the following main result:

Theorem 1.1. *For any given positive integer N, there exists a quasi-Fuchsian manifold M^3 that contains at least 2^N distinct (closed and incompressible) minimal surfaces, and each of them is embedded in M^3.*

We remark here that for different integers N_1 and N_2, the minimal surfaces in the quasi-Fuchsian manifolds from our construction might have different genera. In fact, as N gets large, the genera of the minimal surfaces are expected to get very large as well. There is also a different type of counting problem for closed minimal surfaces in hyperbolic three-manifolds studied in [HL12].

When we lift this quasi-Fuchsian manifold to $\mathbb{H}^3$, a direct consequence of Theorem 1.1 is that we obtain a Jordan curve (not smooth since it is the limit set of a quasi-Fuchsian group) which bounds many disk-type complete minimal surfaces, namely,

Theorem 1.2. *For any given positive integer N, there exists a Jordan curve Λ on S^2_∞, such that there exist at least 2^N distinct complete minimal surfaces in $\mathbb{H}^3$, sharing the boundary Λ at the infinity.*

This is related to a type of "*asymptotic Plateau problem*" studied by Morrey ([Mor48]), Almgren-Simon ([AS79]) and Anderson ([And83]) via geometric measure theory, and more recently Coskunuzer ([Cos09]) from a more topological approach. Our result is restricted to $n = 3$, which is very different from higher dimensions. Moreover, many results on this asymptotic Plateau problem concern the regularity of the prescribed simple closed curve at infinity (see for example [HL87, GS00] and many others). The Jordan curve in our construction is the limit set of some quasi-Fuchsian group, therefore, except in the Fuchsian case, this curve is well known to contain no rectifiable arcs (see for instance [Leh64, Ber72]).

Outline of the construction. Our construction can be outlined as follows: we separate the unit ball $\mathbb{B}^3$ into $N+1$ chambers by N parallel Euclidean circles and these circles are slightly fattened to form bands (see Figure 3); bands are then connected by narrow bridges to form one piecewise smooth Jordan curve Λ (see Figure 4) on the sphere at infinity S^2_∞. There will be two disjoint circles next to every bridge to form a minimal catenoid; we then cover Γ by an even number of small circles on S^2_∞, and they induce, via inversions (or reflections), a quasi-Fuchsian group Γ_Λ whose limit set is within a small neighborhood of the Jordan curve Λ, and hence this gives rise to a quasi-Fuchsian manifold (notably this construction of quasi-Fuchsian groups was known to Poincaré and Fricke-Klein); at last, there are more than 2^N distinct ways to arrange pairs of circles next to the bridges to bound minimal catenoids (see Figure 6), and for each arrangement, we obtain a compact region of mean convex boundary inside the convex core of the corresponding quasi-Fuchsian manifold, which allows us to apply the results of Schoen-Yau and Sacks-Unlenbeck to trap a minimal surface in this region.

There is a construction (unpublished) due to Hass-Thurston of quasi-Fuchsian manifolds which admit many minimal surfaces (see [GW07]). Their construction works for all genera greater than one, while our construction is quite different, and of quantitative nature. Moreover, one can see in our construction that each minimal surface is obtained by removing some solid minimal catenoids in the regions within the convex core of the quasi-Fuchsian manifold. We ([HW13]) have used a simplified version of this type of construction to obtain a quasi-Fuchsian manifold which does not admit a foliation of closed surfaces of constant mean curvature.

Plan of the paper. We organize this paper as follows: Subsections 2.1, 2.2 and 2.3 consist of preliminaries where we recall quasi-Fuchsian groups, quasi-Fuchsian manifolds, minimal surfaces in quasi-Fuchsian manifolds and minimal surfaces of catenoid type in $\mathbb{H}^3$. We prove the main Theorem 1.1 in Section 3 via a construction outlined above. There are several subsections in this main section: in Subsection 3.1, we obtain a condition when two disjoint circles on S^2_∞ bound a minimal catenoid; in Subsection 3.2, we follow the classical construction of quasi-Fuchsian groups by using inversions of circles which bound open disks covering some piecewise smooth Jordan curve; in Subsection 3.3, we find a minimal surface in the corresponding quasi-Fuchsian manifold in the region of the convex core with some solid catenoid removed; Subsection 3.4 contains a topological lemma which will be used later to show the minimal surfaces obtained from the construction are distinct; in Subsection 3.5, we assemble these results to finalize the proof.

2. Preliminaries

In this section, we collect some important facts and describe some key properties on quasi-Fuchsian groups, quasi-Fuchsian manifolds and their minimal surfaces.

2.1. **Quasi-Fuchsian groups and quasi-Fuchsian manifolds.** In this paper, we will work in the ball model ($\mathbb{B}^3$) of the hyperbolic three-space $\mathbb{H}^3$, i.e.,

$$\mathbb{B}^3 = \{(x, y, z) \in \mathbb{R}^3 \mid x^2 + y^2 + z^2 < 1\},$$

equipped with metric

$$ds^2 = \frac{4(dx^2 + dy^2 + dz^2)}{(1 - r^2)^2} \ ,$$

where $r = \sqrt{x^2 + y^2 + z^2}$. The hyperbolic space $\mathbb{H}^3$ has a natural compactification: $\overline{\mathbb{H}^3} = \mathbb{H}^3 \cup S^2_\infty$, where $S^2_\infty \cong \mathbb{C} \cup \{\infty\}$ is the Riemann sphere. The orientation preserving isometry group of the three-ball $\mathbb{B}^3$ is denoted by $\text{Möb}(\mathbb{B}^3)$, which consists of Möbius transformations that preserve the unit ball (see [MT98, Theorem 1.7]). It's well known that $\text{Möb}(\mathbb{B}^3) \cong \text{Isom}^+(\mathbb{H}^3)$, which is isomorphic to $\text{PSL}_2(\mathbb{C})$.

Suppose that X is a subset of $\mathbb{B}^3$. We define the *asymptotic boundary* of X by

$$\partial_\infty X = \overline{X} \cap S^2_\infty \ ,$$

where $\overline{X}$ is the closure of X in $\overline{\mathbb{H}}^3$.

Using the above notation, if P is a geodesic plane in $\mathbb{B}^3$, then P is perpendicular to S^2_∞ and its asymptotic boundary $C \stackrel{\text{def}}{=} \partial_\infty P$ is an Euclidean circle on S^2_∞. We also say that P is *asymptotic to* C.

A (torsion-free) discrete subgroup Γ of $\text{Isom}^+(\mathbb{H}^3)$ is called a *Kleinian group*, and

$$M^3 \equiv M^3_\Gamma = \mathbb{H}^3/\Gamma$$

is a complete hyperbolic three-manifold with the fundamental group $\pi_1(M^3) \cong \Gamma$.

For any Kleinian group Γ, $\forall\, p \in \mathbb{H}^3$, its orbit set

$$\Gamma(p) = \{g(p) \mid g \in \Gamma\}$$

has accumulation points on the Riemann sphere S^2_∞, which are called the *limit points* of Γ. The *limit set* of Γ, denoted by Λ_Γ, is the closure of the limit points on S^2_∞, i.e., $\Lambda_\Gamma = \overline{\Gamma(p)} \cap S^2_\infty$. It is known that Λ_Γ is independent of the choice of the reference point p, and it is a closed Γ-invariant subset of S^2_∞. The open set $\Omega_\Gamma = S^2_\infty \setminus \Lambda_\Gamma$ is called the *domain of discontinuity*. The Kleinian group Γ acts properly discontinuously on Ω_Γ, and the quotient Ω_Γ/Γ is a finite union of Riemann surfaces of finite type if Γ is finitely generated (see [Mar74]).

For any Kleinian group Γ, the *convex hull* of the limit set Λ_Γ, denoted by $\text{Hull}(\Lambda_\Gamma)$, is the smallest convex subset in $\mathbb{H}^3$ whose closure in $\mathbb{H}^3 \cup S^2_\infty$ contains Λ_Γ. The quotient space $\mathscr{C}_\Gamma = \text{Hull}(\Lambda_\Gamma)/\Gamma$ is called the *convex core* of M^3.

A Kleinian group Γ is *quasi-Fuchsian* if $S^2_\infty \setminus \Lambda_\Gamma$ has exactly two components, denoted by $\Omega_\pm$, such that each component is invariant under Γ. If Γ is a quasi-Fuchsian group, then its limit set Λ_Γ is a Jordan curve, and the quotient space $M = \mathbb{H}^3/\Gamma$, which is called a *quasi-Fuchsian manifold*, is diffeomorphic to $\Sigma \times \mathbb{R}$, where $\Sigma = \Omega_+/\Gamma$ or Ω_-/Γ is a finitely punctured compact surface (see [Mar74, Lemma 3.2 and 3.3]).

We always assume that the quasi-Fuchsian group Γ is *torsion-free*. Therefore Ω_+/Γ and Ω_-/Γ are closed surfaces.

2.2. **Minimal surfaces in quasi-Fuchsian manifolds.** Suppose that Σ is a surface (compact or complete) and that M is a 3-dimensional Riemannian manifold (compact or complete). An immersion $f : \Sigma \to M$ is called a *minimal surface* if its mean curvature is identically equal to zero.

If Σ is a closed minimal surface, then it is of *least area* if its area is less than that of any other surfaces in the same homotopy class; it is *area minimizing* if its area is no larger than that of any surface in the same homology class. If $\partial\Sigma \neq \emptyset$, we require that other surfaces should share the same boundary as Σ. If Σ is a (non-compact) complete minimal surface, then it is *least area* or *area minimizing* if any compact subdomain K of Σ is least area or area minimizing.

Recall that a map $f : \Sigma \to M$ of a closed surface Σ into a three-manifold M is called *incompressible* if $f_* : \pi_1(\Sigma) \to \pi_1(M)$ is injective.

The convex core of the quasi-Fuchsian group Γ is a compact hyperbolic three-manifold, whose boundary is convex with respect to the inward normal vector. Schoen-Yau ([SY79]) and Sacks-Uhlenbeck ([SU82]) proved that such a hyperbolic three-manifold always contains an (immersed) incompressible least area minimal surface. By the work of Freedman, Hass and Scott ([FHS83, Theorem 5.1]), this minimal surface is actually embedded. Here we should remark that the ambient hyperbolic three-manifold appeared in the main results in [SY79, SU82, FHS83] and are stated to be compact without boundary, i.e., closed. But from the discussions in [FHS83, p. 635] and the works of Meeks-Yau ([MY82a, MY82b]), these results can be extended to the compact hyperbolic three-manifold whose boundaries are *convex* or *mean convex*.

2.3. **Minimal catenoids in $\mathbb{H}^3$.** Minimal surfaces of catenoid type in $\mathbb{H}^3$ whose asymptotic boundary consists of two circles on S^2_∞ will play an important role in the construction: they serve as barriers among minimal surfaces. In this subsection, we describe the existence of these minimal catenoids. The properties of minimal catenoids can be found in many articles, for example, [Mor81, Gom87, BSE10, Seo11, Wan12a].

Let G be the subgroup of $\text{Möb}(\mathbb{B}^3)$ that leaves a geodesic $\gamma \subset \mathbb{B}^3$ pointwisely fixed; then we call G the *spherical group* of $\mathbb{B}^3$ and γ the *rotation axis* of G. A (connected) surface Π in $\mathbb{B}^3$ that is invariant under G is called a *spherical surface* or a *surface of revolution*. If Π is minimal, then it is called a *spherical minimal catenoid* or a *minimal catenoid*.

For two circles C_1 and C_2 in $\mathbb{H}^3$, if there is a geodesic γ such that each of the circles C_1 and C_2 is invariant under the group of rotations that fixes γ pointwisely, then C_1 and C_2 are said to be *coaxial*, and γ is called the *rotation axis* of C_1 and C_2. If C_1 and C_2 are two disjoint circles on S^2_∞, then they are always coaxial. In this case, we want to know whether there exists a spherical minimal surface that is asymptotic to $C_1 \cup C_2$. This existence depends on two kinds of distances between two disjoint circles on S^2_∞, which we now describe.

Equipping the Riemann sphere S^2_∞ with the spherical metric ρ, then every geodesic on (S^2_∞, ρ) is just a great circle. The orientation preserving isometry group of S^2_∞, denoted by $\text{Isom}^+(S^2_\infty)$, is $\text{SO}(3)$ which is a subgroup of $\text{Möb}(\mathbb{B}^3)$. Suppose C_1 and C_2 are disjoint (round) circles in S^2_∞ which bound disjoint subdisks Δ_1 and Δ_2 of S^2_∞ with injective radii $\leqslant \pi/2$. For $i = 1, 2$, let P_i be the geodesic plane in $\mathbb{B}^3$ such that $\partial_\infty P_i = C_i$. Then we may define two distances between C_1 and C_2 by

$$d_L(C_1, C_2) = \text{dist}(P_1, P_2)\ , \tag{2.1}$$

$$\rho(C_1, C_2) = \min\{\rho(p, q) \mid p \in C_1 \text{ and } q \in C_2\} \tag{2.2}$$

where $\text{dist}(\cdot, \cdot)$ is the hyperbolic distance in $\mathbb{B}^3$ (or $\mathbb{H}^3$). The distance d_L is invariant under $\text{Möb}(\mathbb{B}^3)$, whereas the spherical distance ρ is only invariant under $\text{SO}(3)$.

Suppose that G is the spherical group of $\mathbb{B}^3$ with rotation axis γ_0, a geodesic along on the y-axis; then $\mathbb{B}^3/G \cong \mathbb{B}^2_+$, where

$$\mathbb{B}^2_+ = \{(x, y, z) \in \mathbb{B}^3 \mid z = 0,\ y \geqslant 0\}\ . \tag{2.3}$$

If Π is a spherical minimal catenoid in $\mathbb{B}^3$ with respect to the axis γ_0, then the curve $\sigma = \Pi \cap \mathbb{B}^2_+$ is called the *generating curve* of Π. Gomes ([Gom87]) proved

that σ is symmetric about the y-axis up to isometries. Moreover, he proved the following theorem:

Theorem 2.1 ([Gom87, Proposition 3.2])**.** *There exists a finite constant $d_0 > 0$ such that for two disjoint circles $C_1, C_2 \subset S^2_\infty$, if $d_L(C_1, C_2) \leqslant d_0$, then there exist a minimal surface Π which is a surface of revolution asymptotic to $C_1 \cup C_2$.*

In this paper, we require the existence of *least area* minimal catenoids in order to apply the results in [MY82b]. This is fulfilled by:

Theorem 2.2 ([Wan12a, Theorem 1.2])**.** *There exists a finite constant $d_1 > 0$ such that for two disjoint circles $C_1, C_2 \subset S^2_\infty$, if $d_L(C_1, C_2) \leqslant d_1$, then there exist a least area minimal surface Π which is a surface of revolution asymptotic to $C_1 \cup C_2$.*

3. Main construction

This section is devoted to constructing a quasi-Fuchsian manifold which admits at least 2^N minimal surfaces, for any prescribed positive integer N. Let us outline the organization of this section. In Subsection 3.1, in order to utilize Theorems 2.1, 2.2, to find a minimal catenoid asymptotic to two disjoint circles on S^2_∞, we show how to compute the distance d_L (see the equation (2.1)) between two circles (Lemma 3.1); in Subsection 3.2, we use inversions with respect to disjoint circles on S^2_∞ to construct a quasi-Fuchsian group whose limit set is contained within a small neighborhood of a prescribed (piecewise smooth) Jordan curve on S^2_∞ (Theorem 3.3); in Subsection 3.3, we use the notion of fundamental polyhedron (Definition 3.8) for a quasi-Fuchsian group to find a compact hyperbolic three-manifold with mean convex boundary, which allows us to apply fundamental results of Schoen-Yau, Saks-Uhlenbeck to find a closed minimal surface (Theorem 3.9); finally in Subsection 3.4, we combine the results in previous subsections to prove our main theorem.

3.1. Distances between circles on S^2_∞.

We have introduced two distances (see equations (2.1) and (2.2)) between two disjoint circles on S^2_∞. The purpose of this subsection is to find the relationship between these two distances, and use it to find conditions under which two circles determine a minimal catenoid.

We may calculate the above two distances as follows. As in Subsection 2.3, let C_1 and C_2 be two disjoint circles on S^2_∞, and P_i be the geodesic planes in $\mathbb{B}^3$ and Δ_i be the disks on S^2_∞ with injective radius $\leqslant \pi/2$ such that $\partial_\infty P_i = C_i$ and $\partial \Delta_i = C_i$ for $i = 1, 2$ and such that $\bar{\Delta}_1 \cap \bar{\Delta}_2 = \emptyset$. Now let C be the great circle that passes the centers of Δ_1 and Δ_2, and we also mark p_1 and p_2 as the intersection points of C_1 and C, while q_1 and q_2 are the intersection points of C_2 and C. See Figure 1.

Let P be the geodesic plane asymptotic to C and $\gamma_i = P_i \cap P$. Then, from the definitions, we have $d_L(C_1, C_2) = \mathrm{dist}(\gamma_1, \gamma_2)$, and the spherical distance $\rho(C_1, C_2)$ is equal to the shorter length of two geodesic segments on C between Δ_1 and Δ_2. One of our key lemmas is the following:

Lemma 3.1. *Suppose that C_1 and C_2 are two disjoint circles on S^2_∞ such that $\overline{\Delta}_1 \cap \overline{\Delta}_2 = \emptyset$, where $\Delta_i \subset S^2_\infty$ is a (spherical) disk bounded by C_i with injective radius $\leqslant \pi/2$. Then*

$$d_L(C_1, C_2) \to 0 \ , \quad \text{as } \rho(C_1, C_2) \to 0 \ .$$

In particular, if C_1 and C_2 are tangent at one point on S^2_∞, then $d_L(C_1, C_2) = 0$.

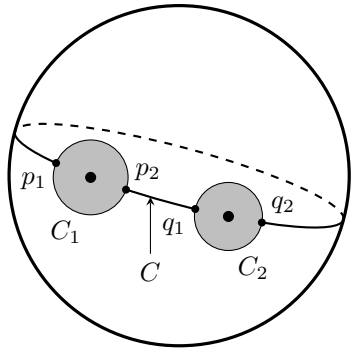

FIGURE 1. Spherical distance between two circles

We note, in this lemma, $\rho(C_1, C_2) \to 0$ means that the spherical distance between two closed sets C_1 and C_2 approaches zero while the injective radii of two disks Δ_1 and Δ_2 stay unchanged.

Proof. Without lost of generality, we may assume that the center of the disk Δ_1 is the north pole, i.e., $(0, 0, 1)$, and the center of Δ_2 lies on the great circle $C = \{(x, 0, z) \in \mathbb{R}^3 \ |x^2 + z^2 = 1\}$. In fact, using at most two rotations along some axes, we can obtain the required picture. Since these two rotations are elements of SO(3), the two distances (2.1) and (2.2) are preserved.

As above, we suppose that $C_1 \cap C = \{p_1, p_2\}$ and $C_2 \cap C = \{q_1, q_2\}$. We order them on the great circle C as p_1, p_2, q_1 and q_2. See Figure 2.

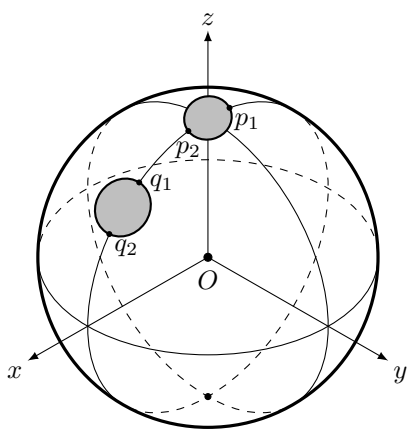

FIGURE 2. Stereographic projection of two circles

Then it is easy to see that $\rho(C_1, C_2) = \min\{\rho(p_2, q_1), \rho(p_1, q_2)\}$. We may assume that $\rho(C_1, C_2) = \rho(p_2, q_1)$.

For $i = 1, 2$, let $\gamma_i = P_i \cap P$, where $P = \{(x, 0, z) \in \mathbb{R}^3 \ |x^2 + z^2 \leqslant 1\}$, and P_i is the geodesic plane asymptotic to C_i. Then $\partial_\infty \gamma_1 = \{p_1, p_2\}$ and $\partial_\infty \gamma_2 = \{q_1, q_2\}$. Since $\mathrm{dist}(P_1, P_2) = \mathrm{dist}(\gamma_1, \gamma_2)$, we have $d_L(C_1, C_2) = \mathrm{dist}(\gamma_1, \gamma_2)$.

There exists a Möbius transformation $\Phi \in \text{Möb}(\widehat{\mathbb{R}}^3)$ that satisfies the following properties (see [MT98, pp.19-20]):

- $\Phi|\mathbb{B}^3 : \mathbb{B}^3 \to \mathbb{H}^3$ is an isometry, and
- $\Phi|S^2_\infty \setminus \{e_3\} : S^2_\infty \setminus \{e_3\} \to \mathbb{C}$ is the stereographic projection,

where $\widehat{\mathbb{R}}^3 = \mathbb{R}^3 \cup \{\infty\}$ and $e_3 = (0,0,1)$.

For $i = 1, 2$, let $\tilde{\gamma}_i = \Phi(\gamma_i)$, and let $u_i = \Phi(p_i)$ and $v_i = \Phi(q_i)$, respectively. Then $\tilde{\gamma}_1$ and $\tilde{\gamma}_2$ are two geodesics in the xy-plane. Since Φ preserves the hyperbolic metrics, we have

$$\text{dist}(\tilde{\gamma}_1, \tilde{\gamma}_2) = \text{dist}(\gamma_1, \gamma_2) = d_L(C_1, C_2) \ . \tag{3.1}$$

Suppose the points u_1, u_2, v_1 and v_2 are contained on the x-axis in the following order: u_1, v_2, v_1, u_2. Since $\partial_\infty \tilde{\gamma}_1 = \{u_1, u_2\}$ and $\partial_\infty \tilde{\gamma}_2 = \{v_1, v_2\}$, applying [Bea95, Eq. (7.23.1)], we have

$$\tanh^2[\text{dist}(\tilde{\gamma}_1, \tilde{\gamma}_2)] = \frac{1}{[u_1, v_2, v_1, u_2]} = \frac{(u_1 - v_2)(v_1 - u_2)}{(u_1 - v_1)(v_2 - u_2)} \ .$$

Then we have the following consequences:

$$\rho(C_1, C_2) \to 0 \implies q_1 \to p_2 \implies v_1 \to u_2 \implies \text{dist}(\tilde{\gamma}_1, \tilde{\gamma}_2) \to 0 \ ,$$

and then $d_L(C_1, C_2) \to 0$ because of (3.1). □

This lemma enables us to conclude that if we can arrange two disjoint circles on S^2_∞ sufficiently close with respect to the (spherical) distance ρ, then we can apply Theorem 2.1 (and Theorem 2.2) to find a (least area) minimal catenoid asymptotic to these two circles.

3.2. **Constructing quasi-Fuchsian groups via inversions.** In this subsection, we use inversions of circles on S^2_∞ to generate a quasi-Fuchsian group and we obtain a quasi-Fuchsian manifold in the quotient.

Suppose that C_1 and C_2 are two circles on S^2_∞. Let f_i be the inversions with respect to to the circle C_i; then each inversion is of order 2, i.e., $f_i^2 = \text{id}$, for $i = 1, 2$. Consider the Möbious transformation $g = f_1 \circ f_2$. We have:

Lemma 3.2. *For this element g, there are three possibilities:*

1. *If $C_1 \cap C_2 = \emptyset$, then g is a loxodromic element, whose fixed points are contained in the disks Δ_1 and Δ_2, respectively.*
2. *If C_1 and C_2 are tangent at some point $z_0 \in \mathbb{R}^2$, then g is a parabolic element with exactly one fixed point z_0.*
3. *If C_1 and C_2 are orthogonal, and $C_1 \cap C_2 = \{z_1, z_2\}$, then g is an elliptic element of order 2 with fixed points $\{z_1, z_2\}$.*

Proof. We will only need to prove the third case, for which we work in the upper half space model. Suppose C_1 is a circle with radius r_1 whose center is the origin, and C_2 is a circle of radius r_2 whose center is at the point $(a, 0)$, where

$$a = (r_1^2 + r_2^2)^{1/2} \ .$$

For any $x \in \mathbb{R}^2$, let $x^* = x/|x|^2$, where $|x|$ is the Euclidean norm. Then the inversions with respect to C_1 and C_2 have the following forms:

$$f_1(x) = r_1^2 x^* \quad \text{and} \quad f_2(x) = a + r_2^2 (x - a)^* \ .$$

We need to show that these two inversions commute, namely, $f_1 \circ f_2 = f_2 \circ f_1$. It is clear that

$$f_2 \circ f_1(x) = a + r_2^2(r_1^2 x^* - a)^* \ . \tag{3.2}$$

Direct computation shows

$$|f_2(x)|^2 = \frac{|r_1^2 x^* - a|^2 |x|^2}{|x-a|^2} \tag{3.3}$$

and

$$|r_1^2 x^* - a|^2 - r_2^2 = \frac{r_1^2(|x-a|^2 - r_2^2)}{|x|^2} \ . \tag{3.4}$$

Therefore, we have

$$\begin{aligned} f_1 \circ f_2(x) &= \frac{r_1^2|x-a|^2}{|r_1^2 x^* - a|^2|x|^2}\left(a + r_2^2(x-a)^*\right) \\ &= \frac{1}{|r_1^2 x^* - a|^2}\left(\frac{r_1^2|x-a|^2 a + r_1^2 r_2^2(x-a)}{|x|^2}\right) \\ &= \frac{1}{|r_1^2 x^* - a|^2}\left(\frac{r_1^2(|x-a|^2 - r_2^2)}{|x|^2}\, a + r_1^2 r_2^2 x^*\right) \\ &= \frac{1}{|r_1^2 x^* - a|^2}\left((|r_1^2 x^* - a|^2 - r_2^2)a + r_1^2 r_2^2 x^*\right) \\ &= a + r_2^2(r_1^2 x^* - a)^* \ . \end{aligned}$$

This agrees with (3.2). Since that $f_i^2 = \mathrm{id}$ for $i = 1, 2$, we have

$$g^2 = f_1 \circ f_2 \circ f_1 \circ f_2 = f_1 \circ f_1 \circ f_2 \circ f_2 = \mathrm{id}\,.$$

Recall that any inversion with respect to some circle fixes that circle pointwisely; then it is not hard to see that $\{z_1, z_2\}$ are the points that are fixed by both f_1 and f_2. This completes the proof of the lemma. □

For any piecewisely smooth simple closed curve Λ on S^2_∞, we can cover it by finitely many small disks. The above lemma allows us to construct a quasi-Fuchsian group Γ, whose limit set Λ_Γ is within some small distance of the curve Λ.

We now proceed with this construction as follow: let $\mathscr{N}_\delta(\Lambda) \subset S^2_\infty$ be a δ-neighborhood of Λ, where δ is a small positive number. Then we can cover the curve Λ by a family of finitely many open disks $\{\Delta_i\}_{i=1}^{2L}$ on S^2_∞, where $L \geqslant 3$, which satisfy the following conditions:

- For each disk Δ_i, its center is on Λ and its injective radius is $\leqslant \delta$.
- Let $C_i = \partial\Delta_i$, each circle C_i intersects C_{i+1} at an angle of $\pi/2$ and $C_i \cap C_j = \emptyset$ for $|i-j| \geqslant 2$, here $C_{2L+1} \overset{\text{def}}{=} C_1$.
- Suppose that $C_i \cap C_{i+1} = \{z_i, z_i'\}$, $i = 1, \ldots, 2L$.

It is easy to see that we have $\Lambda \subset \bigcup_{i=1}^{2L} \Delta_i \subset \mathscr{N}_\delta(\Lambda)$.

Let f_i be the inversion with respect to the circle C_i, and let $g_i = f_i \circ f_{i+1}$, $i = 1, 2, \ldots, 2L$, where $C_{2L+1} = C_1$. Let Γ' be the group generated by the inversions $f_1, f_2, \ldots, f_{2L}$. Let Γ_0 be the group whose elements are the product of an *even number* of inversions f_i. Clearly Γ_0 is a subgroup of Γ' of index 2. The main result in this subsection is the following theorem.

Theorem 3.3. *Let Γ' and Γ_0 be the above groups, and let $\Lambda_{\Gamma'}$ be the limit set of Γ'. Then we have*

(1) *$\Lambda_{\Gamma'}$ is a Jordan curve that passes through all of the points $\{z_i, z_i'\}_{i=1}^{2L}$. Moreover Γ_0 is a quasi-Fuchsian group and $\Lambda_{\Gamma_0} = \Lambda_{\Gamma'} \subset \mathscr{N}_\delta(\Lambda)$.*

(2) *The group Γ_0 has the following presentation:*

$$\Gamma_0 = \langle g_1, \ldots, g_{2L} \mid g_1^2 = 1, \ldots, g_{2L}^2 = 1, g_1 \cdots g_{2L} = 1 \rangle \ . \tag{3.5}$$

(3) *The quotient space $\mathcal{O} = \Omega_+/\Gamma_0$ is a genus zero orbifold that has $2L$ cone points with cone angle π, where $\Omega_\pm = S^2_\infty \setminus \Lambda_{\Gamma_0}$.*

Remark 3.4. This construction of quasi-Fuchsian groups was known at the end of the nineteenth century by Poincaré and Fricke-Klein (see [Poi83, Poi85] and [FK65, pp. 399-445]; see also [Ber72, p. 263]).

Proof. (1). Similar to the discussion in [Mag74, Chapter IV] or [MSW02, Chapter 6], one can show that $\Lambda_{\Gamma'}$ is a Jordan curve contained in $\cup\Delta_i \subset \mathscr{N}_\delta(\Lambda)$. By the construction, Γ_0 is a subgroup of Γ' with index 2, so Γ_0 is a normal subgroup of Γ'. Then it is well known (see for instance [MT98, Lemma 2.22]) that they have the same limit set, namely, $\Lambda_{\Gamma_0} = \Lambda_{\Gamma'}$.

(2). By Lemma 3.2, we have $g_1^2 = 1, \ldots, g_{2L}^2 = 1$, and $g_1 \cdots g_{2L} = f_1^2 = 1$. In order to show that Γ_0 is generated by $g_1, \ldots, g_{2L}$, we only need to consider the special case, i.e., suppose that $h = f_i f_j$, here $|i-j| = k \geqslant 2$. Then we may write h in the form

$$h = \begin{cases} g_i g_{i+1} \cdots g_{j-1} & \text{if } i < j \ , \\ g_{i-1} \cdots g_{i-k+1} g_j & \text{if } i > j \ , \end{cases}$$

which implies that any element of Γ_0 can be written by the product of finitely many g_i, $i = 1, \ldots, 2L$.

(3). The domain $S^2_\infty \setminus \bigcup_{i=1}^{2L} \Delta_i$ has two components, denoted by E and E', where E is a $2L$-polygon with vertices $z_1, z_2, \ldots, z_{2L}$ and E' is also a $2L$-polygon with vertices $z_1', z_2', \ldots, z_{2L}'$. Both E and E' are orbifolds that contain $2L$ corner points with corner angle $\pi/2$. Each of them is a fundamental domain of Γ' in S^2_∞. Recall that Γ_0 is a subgroup of Γ' with index 2 and let $\mathcal{O}$ be the double cover of E or E'. Then Γ_0 is the fundamental group of $\mathcal{O}$ (see [Sco83, pp. 423-424]) and $\Omega_+/\Gamma_0 = \mathcal{O}$ is a 2-sphere that has $2L$ cone points with cone angle π. □

It is well known that $\mathcal{O}$ can be doubly covered by a closed surface Σ of genus $g = L - 1 \geqslant 2$. Therefore Γ_0 contains a torsion-free subgroup Γ of index 2. Therefore again this subgroup is normal and we have $\Lambda_\Gamma = \Lambda_{\Gamma_0}$, and $\mathbb{H}^3/\Gamma \cong \Sigma \times \mathbb{R}$ is quasi-Fuchsian. In particular, we have showed:

Corollary 3.5. *Suppose that Λ is a simple closed (piecewise smooth) curve on S^2_∞. Then for any positive number δ, there exists a torsion-free quasi-Fuchsian group Γ such that its limit set Λ_Γ is contained in a δ-neighborhood of Λ. Furthermore, suppose that Σ is a finite type surface such that $\mathbb{H}^3/\Gamma \cong \Sigma \times \mathbb{R}$; then* genus$(\Sigma) = g(\Lambda, \delta)$. *Here $g(\Lambda, \delta)$ is a positive integer depending only on Λ and δ.*

3.3. **Fundamental polyhedron.** The goal of this subsection is to obtain a compact hyperbolic three-manifold Y whose boundary is mean convex with respect to the inward normal vector. This is achieved by arranging disjoint circles on S^2_∞ in a

particular way such that we can use minimal catenoids (asymptotic to two disjoint circles) as barrier surfaces. Let us start with two definitions.

Definition 3.6. Suppose that $\Lambda_1, \dots, \Lambda_n$ are a family of disjoint Jordan curves on S^2_∞, where $n \geqslant 3$. We say that $\Lambda_1, \dots, \Lambda_n$ are in *good position* if each Jordan curve bounds a topological disk on S^2_∞ that does not contain any other Jordan curves in the family.

First we need a lemma on separation:

Lemma 3.7. *Let C_1, C_2 and C be three disjoint circles on S^2_∞ that are in good position. Suppose that Π is the minimal catenoid with $\partial_\infty \Pi = C_1 \cup C_2$, and P is the geodesic plane with $\partial_\infty P = C$; then $\Pi \cap P = \emptyset$.*

Proof. We may assume that P is on the xy-plane, i.e., $P = \{(x, y, 0) \mid x^2 + y^2 < 1\}$. Otherwise, we may find a Möbius transformation $g \in \text{Möb}(\mathbb{B}^3)$ such that $g(P)$ is on the xy-plane (see [MT98, Proposition 1.3]). In addition, we assume that C_1 and C_2 are above the xy-plane. We now need to prove that Π is above P.

If $\Pi \cap P = \emptyset$, then we are done. Otherwise, for each $t \in (-1, 0]$, let $P(t)$ be the geodesic plane that is perpendicular to the z-axis at the point $(0, 0, t)$. Obviously $P = P(0)$. It is easy to see that the family of the geodesic planes $\{P(t)\}_{-1<t\leqslant 0}$ foliates the lower half ball, i.e., $\{(x, y, z) \in \mathbb{B}^3 \mid -1 < z \leqslant 0\}$. If $\Pi \cap P \neq \emptyset$, then we always can find a number $t_0 \in (-1, 0)$ such that P_{t_0} is tangent to Π at some point in $\mathbb{B}^3$. But this is impossible by the maximum principle, therefore P and Π must be disjoint. □

Suppose that Γ is a quasi-Fuchsian group such that $\mathbb{B}^3/\Gamma \cong \Sigma \times \mathbb{R}$, where Σ is a closed surface of genus $\geqslant 2$. The limit set of Γ is denoted by Λ_Γ, and Λ_Γ separates S^2_∞ into two components, namely, $S^2_\infty \setminus \Lambda_\Gamma = \Omega_+ \cup \Omega_-$.

Definition 3.8 (see section 2.1.2 in [MT98])**.** A closed convex set $\mathscr{P}$ in the hyperbolic space $\mathbb{B}^3$ bounded by a finite collection of hyperbolic planes is called a *fundamental polyhedron* for a quasi-Fuchsian group Γ, if it satisfies the following conditions:

(1) $\bigcup_{g\in\Gamma} g(\mathscr{P}) = \mathbb{B}^3$.
(2) $g(\text{Int } \mathscr{P}) \cap \text{Int } \mathscr{P} = \emptyset$ for any non-trivial element $g \in \Gamma$; here Int $\mathscr{P}$ is the interior of $\mathscr{P}$ in $\mathbb{B}^3$.
(3) For each side S of $\mathscr{P}$, there is another side S' and an element $g \in \Gamma$ such that $g(S) = S'$.
(4) For any compact subset $K \subset \mathbb{B}^3$, $\{g \in \Gamma \mid g(\mathscr{P}) \cap K \neq \emptyset\}$ is a finite set.

The relatively closed sets $Q_\pm = \overline{\mathscr{P}} \cap \Omega_\pm$ are *fundamental domains* of Γ in $\Omega_\pm$, respectively. If Γ is a quasi-Fuchsian group, then we have $\mathscr{P} \cong Q_+ \times \mathbb{R}$. Now we proceed with the following theorem which finds a closed minimal surface in some submanifold of $M^3 = \mathbb{H}^3/\Gamma$.

Theorem 3.9. *Let Λ_Γ be the limit set of some torsion-free quasi-Fuchsian group Γ such that $\mathbb{B}^3/\Gamma$ is homotopic to a closed surface of genus at least two. If $\mathscr{P} \subset \mathbb{B}^3$ is the fundamental polyhedra of the group Γ and $Q_\pm = \overline{\mathscr{P}} \cap S^2_\infty \subset \Omega_\pm$ are the fundamental domains of Γ in $\Omega_\pm$, respectively, where $\Omega_\pm = S^2_\infty \setminus \Lambda_\Gamma$. Suppose that*

$\Pi_1, \ldots, \Pi_n$ are finite disjoint least area minimal catenoids in $\overline{\mathbb{B}^3}$ that satisfy the following conditions:

(1) *The asymptotic boundary of each minimal catenoid must either both be contained in Q_+ or both be contained in Q_-.*
(2) *If $n = 1$, then $\partial_\infty \Pi_1$ and Λ_Γ are in good position; if $n \geqslant 2$, then the asymptotic boundaries $\partial_\infty \Pi_1, \ldots, \partial_\infty \Pi_n$ are in good position.*
(3) *Λ_Γ is null-homotopic in the component of $\mathbb{B}^3 \setminus \cup \Pi_l$ which contains Λ_Γ.*

Then there exists a Γ-invariant minimal disk with asymptotic boundary Λ_Γ, which is disjoint from $g(\Pi_l)$, for all $g \in \Gamma$ and all $l \in \{1, \ldots, n\}$. Furthermore, the disk is embedded in $\mathbb{B}^3$.

Proof. Our strategy is to remove some solid catenoids from $\mathbb{B}^3$ to obtain a submanifold of the quasi-Fuchsian manifold $M^3 = \mathbb{B}^3/\Gamma$.

We let $\mathbf{T}_l$ be the solid catenoid bounded by Π_l for each $l = 1, \ldots, n$. By the assumptions and Lemma 3.7, we know that these solid catenoids lie inside the fundamental polyhedron of the quasi-Fuchsian group Γ, namely, $\mathbf{T}_l \subset \mathscr{P}$ for each $l = 1, \ldots, n$. Therefore, in what follows we abuse our notion to use $\mathbf{T}_l$ to denote the corresponding solid catenoid in M^3 as well.

From assumption of the theorem, we may assume that $\partial_\infty \Pi_l \subset Q_+$ for $l = 1, \ldots, m$, and $\partial_\infty \Pi_l \subset Q_-$ for $l = m+1, \ldots, n$, where $m \leqslant n$ are positive integers.

Since $\mathbf{T}_l \subset \mathscr{P}$, we also have $g(\mathbf{T}_l) \subset g(\mathscr{P})$ for all $g \in \Gamma$ and $l = 1, \ldots, n$. Let

$$\mathbf{X}_\infty = \left\{ \overline{\mathbb{B}^3 \setminus \bigcup_{g \in \Gamma} \bigcup_{l=1}^{n} g(\mathbf{T}_l)} \right\} \setminus S^2_\infty \,, \tag{3.6}$$

then $\mathbf{X}_\infty$ is a Γ-invariant subset of $\mathbb{H}^3$. Let $M_\infty = \mathbf{X}_\infty/\Gamma$. Since $\mathbf{T}_l \subset \mathscr{P}$ for all $l = 1, \ldots, n$, it is clear that M_∞ is a submanifold of the quasi-Fuchsian manifold $M^3 = \mathbb{H}^3/\Gamma$. By the construction, M_∞ is a homogeneously regular three-manifold in the sense of Morrey ([Mor48]), whose boundary is mean convex with respect to the inward normal vector.

Now let $Y = \mathscr{C}_\Gamma \cap M_\infty$, where $\mathscr{C}_\Gamma$ is the convex core of the quasi-Fuchsian manifold M^3. Then Y is a compact hyperbolic three-manifold whose boundary is mean convex with respect to the inward normal vector (for the precise meaning of positive mean curvature with respect to inward normal vector; see §7 of [FHS83]).

By Lemma 3.11 which we will prove later, this hyperbolic three-manifold Y contains a closed surface that is incompressible. As discussed in Subsection 2.2, we can now apply the results of Schoen-Yau, Sacks-Uhlenbeck, Freedman-Hass-Scott, to conclude Y also contains an embedded least area surface, denoted by Σ, which is incompressible. Lifting this minimal surface Σ to $\mathbb{H}^3$, we obtain an embedded Γ-invariant minimal disk $\widetilde{\Sigma}$ in $\mathbf{X}_\infty$ with asymptotic boundary Λ_Γ. □

Remark 3.10. In general, the universal cover, $\widetilde{\Sigma}$, of an area minimizing surface Σ in $M^3 = \mathbb{H}^3/\Gamma$ is not necessarily a least area minimal disk in $\mathbb{H}^3$ whose asymptotic boundary is Λ_Γ.

To complete the proof for Theorem 3.9, we prove the following lemma:

Lemma 3.11. *There exists a closed incompressible surface F contained in Y.*

Proof. The convex core of a quasi-Fuchsian manifold has two boundary components, namely we can write $\partial\mathscr{C}_\Gamma = F_+ \cup F_-$, where $F_\pm$ is the pleated surface that faces the surface $\Omega_\pm/\Gamma$, respectively.

Let $W_\pm$ be the submanifold of M^3 that is bounded by $F_\mp$ and the conformal infinity $\Omega_\pm/\Gamma$, respectively. Obviously $\mathscr{C}_\Gamma = W_+ \cap W_-$. Then $\partial W_\pm = F_\mp$ is convex with respect to the inward normal vector. For all $l = 1, \dots, n$, since the catenoid $\Pi_l = \partial \mathbf{T}_l$ is a least area minimal surface, by [MY82a, Theorem 1], $\Pi_l \subset W_+$ if $1 \leqslant l \leqslant m$, and $\Pi_l \subset W_-$ if $m+1 \leqslant l \leqslant n$. Therefore $\mathbf{T}_l \subset W_+$ if $1 \leqslant l \leqslant m$, and $\mathbf{T}_l \subset W_-$ if $m+1 \leqslant l \leqslant n$.

Since Λ_Γ is null-homotopic in the component of $\mathbb{B}^3 \setminus \cup \Pi_l$ which contains Λ_Γ, there exists a disk D that is asymptotic to Λ_Γ and that is disjoint from $\{\mathbf{T}_1, \dots, \mathbf{T}_n\}$. In particular, $D \cap \mathscr{P}$ is disjoint from $\{\mathbf{T}_1, \dots, \mathbf{T}_n\}$. Then we can perturb $D \cap \mathscr{P}$ to get a disk $\Delta \subset \mathscr{P}$ so that Δ is still disjoint from $\{\mathbf{T}_1, \dots, \mathbf{T}_n\}$ and

$$\mathcal{D} = \bigcup_{g \in \Gamma} g(\Delta)$$

is a Γ-invariant disk asymptotic to Λ_Γ, and it is disjoint from $g(\mathbf{T}_l)$ for all $g \in \Gamma$ and all $l \in \{1, \dots, n\}$.

Let $F' = \mathcal{D}/\Gamma$; then clearly F' is a closed incompressible surface. If F' is contained in Y, then we are done. Otherwise, by the above discussion, F_+ is disjoint from $\mathbf{T}_l$ for all $m+1 \leqslant l \leqslant n$ and F_- is disjoint from $\mathbf{T}_l$ for all $1 \leqslant l \leqslant m$, so F' is isotopic to an incompressible surface $F \subset Y$ via an isotopy $\varphi_t : M_\infty \to M_\infty$ such that $\varphi_0 = \mathrm{id}_{M_\infty}$ and each φ_t is a homeomorphism, where $0 \leqslant t \leqslant 1$. □

3.4. **A topological lemma.** We will prove a topological lemma in this subsection (see Lemma 3.12). This will be very useful when we show the distinctiveness of minimal surfaces from the construction.

Let us recall some notation. Let Λ be a Jordan curve on the sphere at infinity S^2_∞, and $\Omega_\pm = S^2_\infty \setminus \Lambda$. Suppose there are two disjoint solid minimal catenoids $\mathbf{T}_\pm$ with boundary circles $\partial_\infty \mathbf{T}_\pm = \Delta'_\pm \cup \Delta''_\pm \subset \Omega_\pm$. Let $\delta_\pm \subset \mathbb{B}^3 \cup S^2_\infty$ be two (unknotted) simple closed curves constructed as follows: take two points $p'_+ \in \Delta'_+$ and $p''_+ \in \Delta''_+$. Let $\alpha_+ \subset \mathbf{T}_+$ be a curve with asymptotic endpoints p'_+ and p''_+, and let $\beta_+ \subset \Omega_+$ be a simple curve with endpoints p'_+ and p''_+. Let $\delta_+ = \alpha_+ \cup \beta_+$. Similarly we can define the loop δ_-.

We say that solid minimal catenoids $\mathbf{T}_+$ and $\mathbf{T}_-$ are *linked* (or *unlinked*) in $\mathbb{B}^3 \cup S^2_\infty$ if δ_+ and δ_- are linked (or unlinked) loops. See Figure 3 for the linked case.

Lemma 3.12. *We have the following statements:*

(1) *If solid minimal catenoids $\mathbf{T}_+$ and $\mathbf{T}_-$ are linked in $\mathbb{B}^3 \cup S^2_\infty$, then the Jordan curve Λ is essential in the space $\overline{\mathbb{B}^3 \setminus (\mathbf{T}_+ \cup \mathbf{T}_-)}$.*

(2) *If $\mathbf{T}_+$ and $\mathbf{T}_-$ are unlinked in $\mathbb{B}^3 \cup S^2_\infty$, then Λ is null-homotopic in the space $\overline{\mathbb{B}^3 \setminus (\mathbf{T}_+ \cup \mathbf{T}_-)}$.*

Remark 3.13. If the boundary circles $\partial_\infty \mathbf{T}_+$ and $\partial_\infty \mathbf{T}_-$ are contained in the same component of $S^2_\infty \setminus \Lambda$, then Λ is always null-homotopic in $\overline{\mathbb{B}^3 \setminus (\mathbf{T}_+ \cup \mathbf{T}_-)}$.

Proof of Lemma 3.12. We will only prove statement (1) as the other follows easily. We consider the equivalent figure of Figure 3 (see Exercise I.6 in [Rol90, Chapter 3]): Let X denote the solid cylinder in Figure 4, and let V be the quotient space

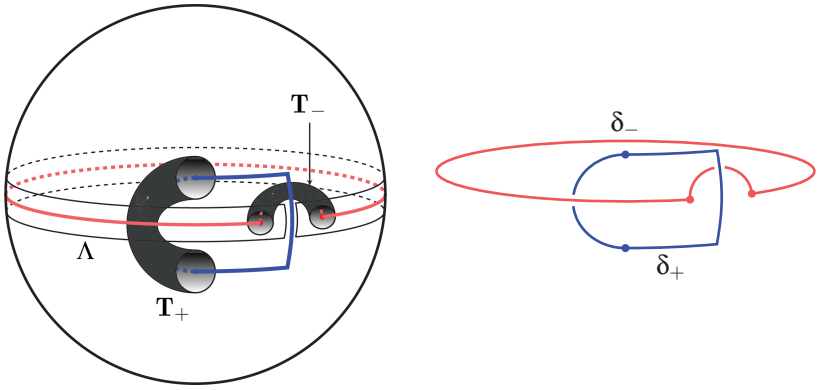

FIGURE 3. Linked loops in $\mathbb{B}^3 \cup S^2_\infty$

of X obtained by gluing the top and the bottom disks of X. We also identify Δ'_+ with Δ'_- and Δ''_+ with Δ''_- in the quotient space V; then $J = \mathbf{T}_+ \cup \mathbf{T}_-$ is a solid torus contained in V.

If the Jordan curve Λ is null-homotopic in $X \setminus (\mathbf{T}_+ \cup \mathbf{T}_-)$, then it is also null-homotopic in $V \setminus J$. But this is impossible according to Proposition G.3 in [Rol90, Chapter 3]. Therefore Λ is not contractible in $\overline{\mathbb{B}^3 \setminus (\mathbf{T}_+ \cup \mathbf{T}_-)}$. $\square$

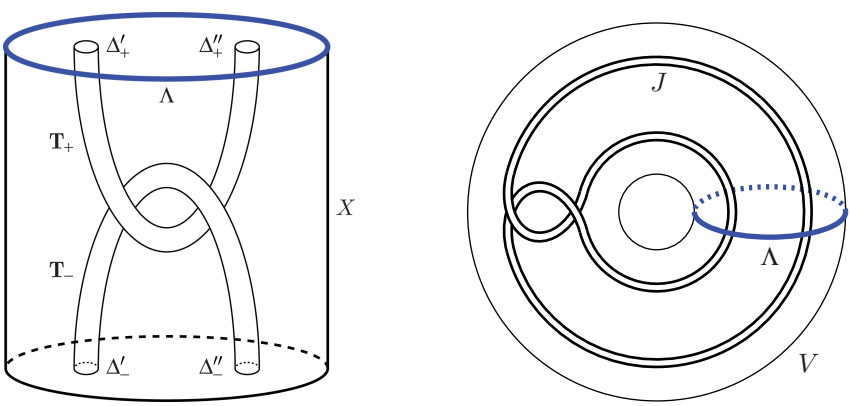

FIGURE 4. Jordan curve Λ is essential in $\overline{\mathbb{B}^3 \setminus (\mathbf{T}_+ \cup \mathbf{T}_-)}$

3.5. **Proof of the main theorem.** In this subsection, we use results of the previous subsections to prove our main Theorem 1.1, namely, for a prescribed integer N, we construct a quasi-Fuchsian manifold $M^3 = \mathbb{H}^3/\Gamma$ such that it contains at least 2^N many closed incompressible minimal surfaces.

All figures in this subsection correspond to the case $N = 3$ for simplicity.

Proof of Theorem 1.1. The construction consists of four steps which we now describe.

Step 1. Consider the unit ball $\mathbb{B}^3$ in the xyz-space. We divide the interval $[-1,1]$ on the z-axis into $N+1$ subintervals of equal length. Let $\varepsilon > 0$ be a sufficiently small number and $H_i^{\pm}$ be the (Euclidean) horizontal planes

$$z = 1 - \frac{2i}{N+1} \pm \varepsilon, \quad 1 \leqslant i \leqslant N \ .$$

Let $C_i^{\pm} = H_i^{\pm} \cap S^2_\infty$ be a pair of parallel circles on S^2_∞, $1 \leqslant i \leqslant N$.

By Lemma 3.1 and Theorem 2.1, we may assume that ε is sufficiently small so that we can find a pair of circles above C_i^+ and below C_i^-, respectively, that bound a spherical minimal catenoid for each $1 \leqslant i \leqslant N$ (see Figure 5). By Theorem 2.2, we may assume each minimal catenoid is of least area.

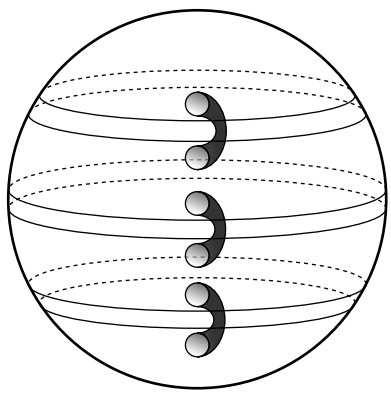

FIGURE 5. $2N$ parallel circles ($N = 3$)

Step 2. We connect each pair of parallel circles $C_i^{\pm}$ by a narrow bridge B_i, ($1 \leqslant i \leqslant N$), and connect each pair of parallel circles C_i^- and C_{i+1}^+ by a narrow bridge B'_j ($1 \leqslant j \leqslant N-1$); then we obtain a piecewise smooth Jordan curve $\Lambda \subset S^2_\infty$ (see Figure 6).

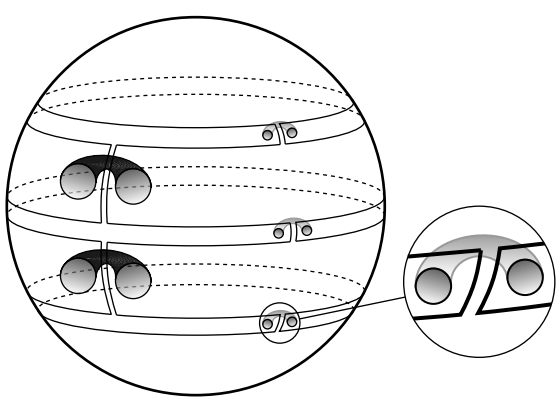

FIGURE 6. $2N-1$ narrow bridges ($N = 3$)

By Lemma 3.1 and Theorem 2.2, we may assume that the $2N-1$ bridges are again sufficiently narrow so that we can find a pair of circles around each bridge that bound a spherical least area minimal catenoid.

By the construction, there are a total of $6N-2$ disjoint circles, and they are in good position. We also obtain $3N-1$ solid minimal catenoids in $\mathbb{B}^3$ for each pair of disjoint circles next to the same bridge.

Step 3. Now we construct the quasi-Fuchsian group Γ by the method in Subsection 3.2. In particular, we cover the Jordan curve Λ in Step 2 by $2L$ small disks $\{\Delta_1, \Delta_2, \ldots, \Delta_{2L}\}$ on S^2_∞. We can choose these disks sufficiently small such that $\bigcup \Delta_i$ is disjoint from the $6N-2$ circles in Step 2 (see Figure 7).

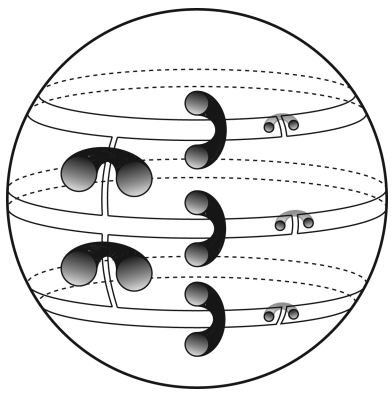

FIGURE 7. $3N-1$ catenoids ($N=3$)

Now we are in position to apply Theorem 3.3 to use the inversions with respect to the circles $\{\partial\Delta_1, \partial\Delta_2, \ldots, \partial\Delta_{2L}\}$ to construct a torsion-free quasi-Fuchsian group Γ whose limit set Λ_Γ is contained in $\bigcup_{i=1}^{2L} \Delta_i$.

It is easy to see that $\bigcup_{i=1}^{2L} \Delta_i$ separates the sphere S^2_∞ into two components, denoted by $E_\pm$. By the construction, it is clear that for each pair of the $6N-2$ circles, either both are contained in E_+ or both are in E_-. Therefore, for each pair of these circles, either both are in Q_+ or both are in Q_-, where $E_\pm \subset Q_\pm \subset \Omega_\pm$ are the asymptotic boundary of a fundamental polyhedron $\mathscr{P}$ of Γ.

Step 4. Now we can choose the $3N-1$ pairs of circles in different ways to form $2N-1$ minimal catenoids (see Figure 8 for the case when $N=3$). Let us fix some notation: each Jordan curve in Figure 8 represents the limit set Λ_Γ of the quasi-Fuchsian group Γ. Let the circles next to bridges B'_j ($1 \leqslant j \leqslant N-1$) be fixed. Therefore the $N-1$ minimal catenoids bounded by these circles are fixed as well. Now we are left with $2N$ minimal catenoids: N bounded by each pair of two disjoint circles next to the bridge B_i ($1 \leqslant i \leq N$), and the other N, each bounded by a circle above the circle C_i^+ and a circle below the circle C_i^- ($1 \leqslant i \leq N$), as in Figure 5. Namely, for each bridge B_i, $1 \leqslant i \leq N$, there are two choices of minimal catenoids. Hence we have a choice of 2^N many different ways to obtain $2N-1$ minimal catenoids, which can be seen from the following: let Π'_i, Π^B_i, and Π^C_i be the minimal catenoids asymptotic to the circles near the bridge B'_i, the bridge B_i and the circle C_i, respectively. For each function $\imath : \{1, \cdots, N\} \to \{B, C\}$,

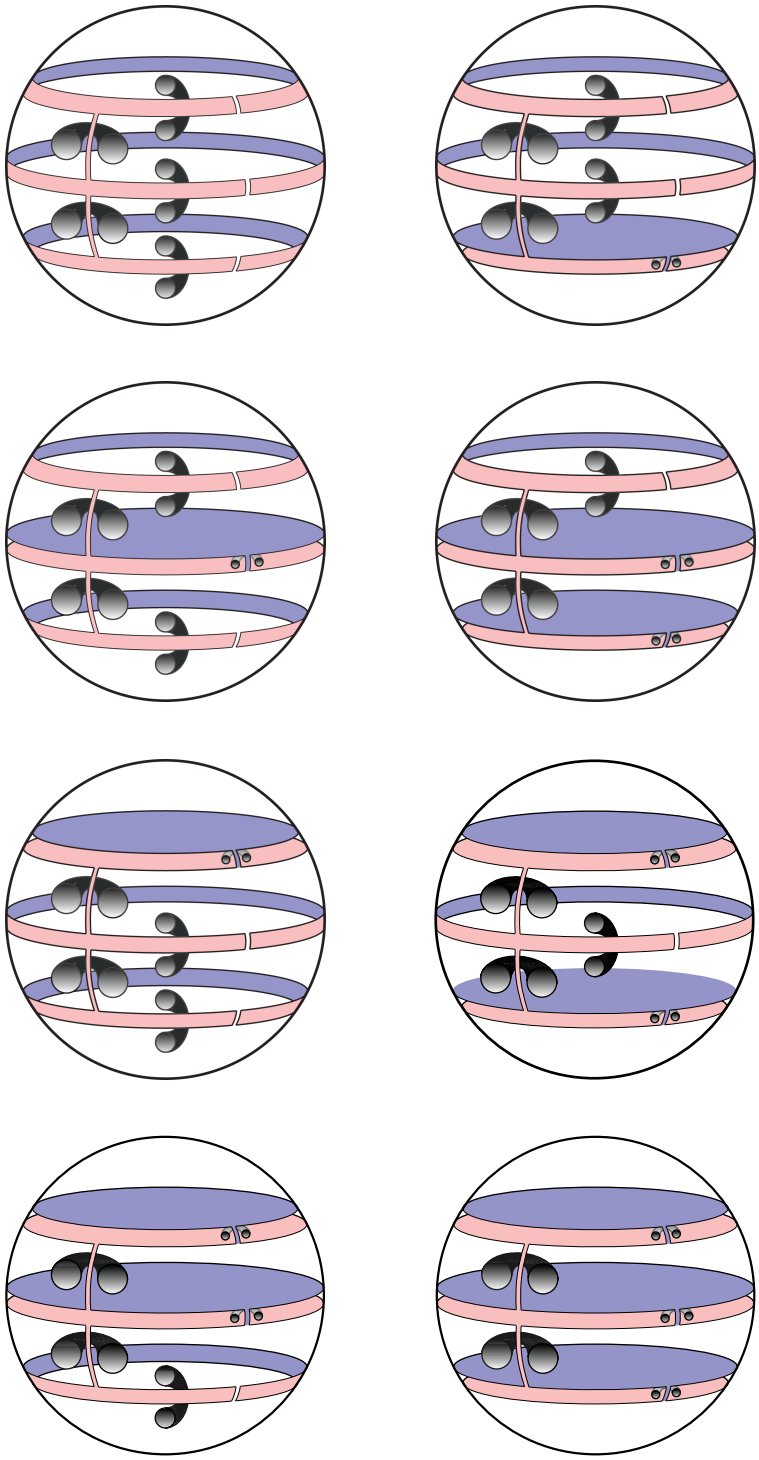

FIGURE 8. 2^N minimal surfaces ($N = 3$)

let $\Pi = \bigcup_{i=1}^{N} \Pi_i^{\imath(i)}$. We see that for each $\imath$, $\Pi_\imath$ is a collection of N minimal catenoids. Such a collection, together with $\bigcup_{i=1}^{N-1} \Pi'_i$, is then a collection of $2N-1$ minimal catenoids. Since there are 2^N choices of $\imath$, there are 2^N such collections. For example, in Figure 8 where $N = 3$, there are 8 total choices, each case leading to 5 minimal catenoids.

Now for each case, it is easy to verify that Λ_Γ bounds a disk, which consists of strips and/or disks connected by narrow bridges, and are disjoint from $2N-1$ solid catenoids. Therefore it is null-homotopic in the subspace of $\mathbb{B}^3$ with $2N-1$ solid catenoids removed. For example, when $N = 3$, we consider the top right figure in Figure 8. It is easy to see that Λ_Γ bounds a disk consisting of two strips and two disks connected by 3 narrow bridges; therefore, Λ_Γ is null-homotopic in the subspace of $\mathbb{B}^3$ with 5 solid catenoids removed (see Figure 9).

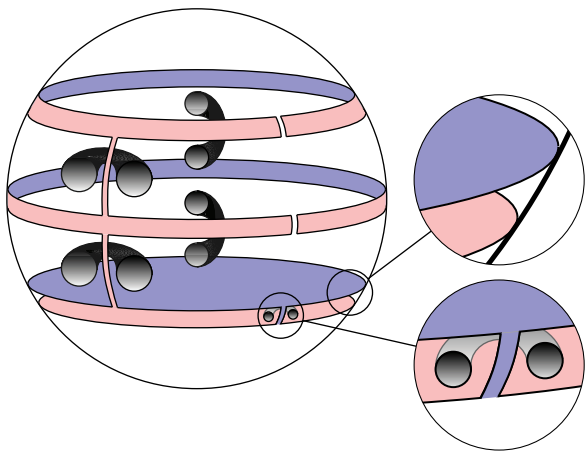

FIGURE 9. Λ_Γ is null-homotopic in the subspace of $\mathbb{B}^3$ with $2N-1$ solid catenoids removed ($N = 3$)

Now we apply Theorem 3.9. For each case, there is a Γ-invariant minimal disk with asymptotic boundary Λ_Γ. Therefore we obtain 2^N Γ-invariant minimal disks in $\mathbb{B}^3$, denoted by $\mathcal{D}_1, \ldots, \mathcal{D}_{2^N}$, which all share the asymptotic boundary Λ_Γ.

We claim that these minimal disks $\mathcal{D}_1, \ldots, \mathcal{D}_{2^N}$ are distinct. To illustrate this, we once again consider the case when $N = 3$. We count the minimal surfaces in Figure 8 from left to right and from top to bottom. Recall that each minimal disk $\mathcal{D}_i$ ($i = 1, \ldots, 8$) is isotopic to the disk in the i-th subspace of $\mathbb{B}^3$ with 5 catenoids removed in Figure 8. We can now show, for example, that $\mathcal{D}_2$ (see Figure 9) is distinct from the other seven minimal disks. Indeed, the disk $\mathcal{D}_2$ is distinct from $\mathcal{D}_1$, since $\mathcal{D}_1$ intersects the bottom catenoid in Figure 9 by Lemma 3.12; similarly, by Lemma 3.12, each $\mathcal{D}_i$, $i = 3, \ldots, 8$, intersects either the top catenoid, the middle catenoid or both in Figure 9. Therefore $\mathcal{D}_1, \ldots, \mathcal{D}_8$ are distinct minimal disks. The general case is similar, therefore these minimal disks $\mathcal{D}_1, \ldots, \mathcal{D}_{2^N}$ from our construction are distinct.

Now we set $\Sigma_i = \mathcal{D}_i/\Gamma$, $i = 1, \ldots, 2^N$; then $\Sigma_1, \ldots, \Sigma_{2^N}$ are distinct embedded incompressible minimal surfaces in the quasi-Fuchsian manifold $M^3 = \mathbb{B}^3/\Gamma$. This completes the proof of our main theorem. $\square$

In Step 4, the minimal disks $\mathcal{D}_1, \ldots, \mathcal{D}_{2N}$ share the asymptotic boundary Γ, which is the Jordan curve justifying Theorem 1.2.

Remark 3.14 (On the genus of the surface). By our construction, we use $2L$ small disks of injective radii $< \delta$ to cover the Jordan curve Λ. Then by Theorem 3.3, we can construct a torsion-free quasi-Fuchsian group Γ so that $\mathbb{B}^3/\Gamma \cong F \times \mathbb{R}$, where F is a closed surface with genus$(F) = L - 1$. One sees that Length$(\Lambda)/\delta$ is large, and therefore so is the genus of F, and $L \to \infty$ as $N \to \infty$.

Acknowledgements

The idea of using minimal catenoids as barrier surfaces was originally suggested by Bill Thurston. We dedicate this paper to his memory. We are also grateful to Joel Hass for explaining the Hass-Thurston construction on quasi-Fuchsian manifolds that contain arbitrarily many minimal surfaces. We would also like to express our sincere gratitude to the referee for numerous corrections, many constructive suggestions and helpful comments. The research of the first author was partially supported by a PSC-CUNY award and Provost's Research Scholarship of CUNY-CSI. We also acknowledge support from the US National Science Foundation grants DMS1107452, DMS1107263, DMS1107367 and "RNMS: GEometric structures And Representation varieties" (the GEAR network).

References

[And83] Michael T. Anderson, *Complete minimal hypersurfaces in hyperbolic n-manifolds*, Comment. Math. Helv. **58** (1983), no. 2, 264–290, DOI 10.1007/BF02564636. MR705537 (85e:53076)

[AS79] Frederick J. Almgren Jr. and Leon Simon, *Existence of embedded solutions of Plateau's problem*, Ann. Scuola Norm. Sup. Pisa Cl. Sci. (4) **6** (1979), no. 3, 447–495. MR553794 (81d:49025)

[Bea95] Alan F. Beardon, *The geometry of discrete groups*, Graduate Texts in Mathematics, vol. 91, Springer-Verlag, New York, 1995. Corrected reprint of the 1983 original. MR1393195 (97d:22011)

[Ber72] Lipman Bers, *Uniformization, moduli, and Kleinian groups*, Bull. London Math. Soc. **4** (1972), 257–300. MR0348097 (50 #595)

[BSE10] Pierre Bérard and Ricardo Sa Earp, *Lindelöf's theorem for hyperbolic catenoids*, Proc. Amer. Math. Soc. **138** (2010), no. 10, 3657–3669, DOI 10.1090/S0002-9939-2010-10492-6. MR2661564 (2011e:53087)

[Cos09] Baris Coskunuzer, *Asymptotic Plateau problem*, ArXiv e-print, arXiv:0907.0552 (2009).

[FHS83] Michael Freedman, Joel Hass, and Peter Scott, *Least area incompressible surfaces in 3-manifolds*, Invent. Math. **71** (1983), no. 3, 609–642, DOI 10.1007/BF02095997. MR695910 (85e:57012)

[FK65] Robert Fricke and Felix Klein, *Vorlesungen über die Theorie der automorphen Funktionen. Band 1: Die gruppentheoretischen Grundlagen. Band II: Die funktionentheoretischen Ausführungen und die Andwendungen* (German), Bibliotheca Mathematica Teubneriana, Bände 3, vol. 4, Johnson Reprint Corp., New York, 1965. MR0183872 (32 #1348)

[GHW10] Ren Guo, Zheng Huang, and Biao Wang, *Quasi-Fuchsian 3-manifolds and metrics on Teichmüller space*, Asian J. Math. **14** (2010), no. 2, 243–256. MR2746123 (2011k:32015)

[Gom87] Jonas de Miranda Gomes, *Spherical surfaces with constant mean curvature in hyperbolic space*, Bol. Soc. Brasil. Mat. **18** (1987), no. 2, 49–73, DOI 10.1007/BF02590023. MR1018445 (90h:53009)

[GS00] Bo Guan and Joel Spruck, *Hypersurfaces of constant mean curvature in hyperbolic space with prescribed asymptotic boundary at infinity*, Amer. J. Math. **122** (2000), no. 5, 1039–1060. MR1781931 (2001j:53069)

[GW07] William M. Goldman and Richard A. Wentworth, *Energy of twisted harmonic maps of Riemann surfaces*, In the tradition of Ahlfors-Bers. IV, Contemp. Math., vol. 432, Amer. Math. Soc., Providence, RI, 2007, pp. 45–61, DOI 10.1090/conm/432/08299. MR2342806 (2008m:58029)

[Has05] Joel Hass, *Minimal surfaces and the topology of three-manifolds*, Global theory of minimal surfaces, Clay Math. Proc., vol. 2, Amer. Math. Soc., Providence, RI, 2005, pp. 705–724. MR2167285 (2006d:53004)

[HL87] Robert Hardt and Fang-Hua Lin, *Regularity at infinity for area-minimizing hypersurfaces in hyperbolic space*, Invent. Math. **88** (1987), no. 1, 217–224, DOI 10.1007/BF01405098. MR877013 (88m:49033)

[HL12] Zheng Huang and Marcello Lucia, *Minimal immersions of closed surfaces in hyperbolic three-manifolds*, Geom. Dedicata **158** (2012), 397–411, DOI 10.1007/s10711-011-9641-9. MR2922723

[HW13] Zheng Huang and Biao Wang, *On almost-Fuchsian manifolds*, Trans. Amer. Math. Soc. **365** (2013), no. 9, 4679–4698, DOI 10.1090/S0002-9947-2013-05749-2. MR3066768

[KS07] Kirill Krasnov and Jean-Marc Schlenker, *Minimal surfaces and particles in 3-manifolds*, Geom. Dedicata **126** (2007), 187–254, DOI 10.1007/s10711-007-9132-1. MR2328927 (2009c:53076)

[Leh64] Joseph Lehner, *Discontinuous groups and automorphic functions*, Mathematical Surveys, No. VIII, American Mathematical Society, Providence, R.I., 1964. MR0164033 (29 #1332)

[Mag74] Wilhelm Magnus, *Noneuclidean tesselations and their groups*, Academic Press [A subsidiary of Harcourt Brace Jovanovich, Publishers], New York-London, 1974. Pure and Applied Mathematics, Vol. 61. MR0352287 (50 #4774)

[Mar74] Albert Marden, *The geometry of finitely generated kleinian groups*, Ann. of Math. (2) **99** (1974), 383–462. MR0349992 (50 #2485)

[Mor48] Charles B. Morrey Jr., *The problem of Plateau on a Riemannian manifold*, Ann. of Math. (2) **49** (1948), 807–851. MR0027137 (10,259f)

[Mor81] Hiroshi Mori, *Minimal surfaces of revolution in H^3 and their global stability*, Indiana Univ. Math. J. **30** (1981), no. 5, 787–794, DOI 10.1512/iumj.1981.30.30057. MR625602 (82k:53082)

[MSW02] David Mumford, Caroline Series, and David Wright, *Indra's pearls*, Cambridge University Press, New York, 2002. The vision of Felix Klein. MR1913879 (2003f:00005)

[MT98] Katsuhiko Matsuzaki and Masahiko Taniguchi, *Hyperbolic manifolds and Kleinian groups*, Oxford Mathematical Monographs, The Clarendon Press Oxford University Press, New York, 1998. Oxford Science Publications. MR1638795 (99g:30055)

[MY82a] William H. Meeks III and Shing Tung Yau, *The classical Plateau problem and the topology of three-dimensional manifolds. The embedding of the solution given by Douglas-Morrey and an analytic proof of Dehn's lemma*, Topology **21** (1982), no. 4, 409–442, DOI 10.1016/0040-9383(82)90021-0. MR670745 (84g:53016)

[MY82b] William W. Meeks III and Shing Tung Yau, *The existence of embedded minimal surfaces and the problem of uniqueness*, Math. Z. **179** (1982), no. 2, 151–168, DOI 10.1007/BF01214308. MR645492 (83j:53060)

[Poi83] Henri Poincaré, *Mémoire sur les groupes kleinéens*, Acta Math. **3** (1883), no. 1, 49–92.

[Poi85] ———, *Papers on Fuchsian functions*, Springer-Verlag, New York, 1985.

[Rol90] Dale Rolfsen, *Knots and links*, Mathematics Lecture Series, vol. 7, Publish or Perish Inc., Houston, TX, 1990. Corrected reprint of the 1976 original. MR1277811 (95c:57018)

[Rub05] J. Hyam Rubinstein, *Minimal surfaces in geometric 3-manifolds*, Global theory of minimal surfaces, Clay Math. Proc., vol. 2, Amer. Math. Soc., Providence, RI, 2005, pp. 725–746. MR2167286 (2006g:57038)

[Rub07] J. H. Rubinstein, *Problems around 3-manifolds*, Workshop on Heegaard Splittings, Geom. Topol. Monogr., vol. 12, Geom. Topol. Publ., Coventry, 2007, pp. 285–298, DOI 10.2140/gtm.2007.12.285. MR2408251 (2009i:57050)

[Sco83] Peter Scott, *The geometries of* 3*-manifolds*, Bull. London Math. Soc. **15** (1983), no. 5, 401–487, DOI 10.1112/blms/15.5.401. MR705527 (84m:57009)

[Seo11] Keomkyo Seo, *Stable minimal hypersurfaces in the hyperbolic space*, J. Korean Math. Soc. **48** (2011), no. 2, 253–266, DOI 10.4134/JKMS.2011.48.2.253. MR2789454 (2012c:53096)

[SU82] J. Sacks and K. Uhlenbeck, *Minimal immersions of closed Riemann surfaces*, Trans. Amer. Math. Soc. **271** (1982), no. 2, 639–652, DOI 10.2307/1998902. MR654854 (83i:58030)

[SY79] R. Schoen and Shing Tung Yau, *Existence of incompressible minimal surfaces and the topology of three-dimensional manifolds with nonnegative scalar curvature*, Ann. of Math. (2) **110** (1979), no. 1, 127–142, DOI 10.2307/1971247. MR541332 (81k:58029)

[Tau04] Clifford Henry Taubes, *Minimal surfaces in germs of hyperbolic 3-manifolds*, Proceedings of the Casson Fest, Geom. Topol. Monogr., vol. 7, Geom. Topol. Publ., Coventry, 2004, pp. 69–100 (electronic), DOI 10.2140/gtm.2004.7.69. MR2172479 (2007a:53157)

[Uhl83] Karen K. Uhlenbeck, *Closed minimal surfaces in hyperbolic* 3*-manifolds*, Seminar on minimal submanifolds, Ann. of Math. Stud., vol. 103, Princeton Univ. Press, Princeton, NJ, 1983, pp. 147–168. MR795233 (87b:53093)

[Wan12a] Biao Wang, *Least area spherical catenoids in hyperbolic three-dimensional space*, Preprint (2012).

[Wan12b] Biao Wang, *Minimal surfaces in quasi-Fuchsian 3-manifolds*, Math. Ann. **354** (2012), no. 3, 955–966, DOI 10.1007/s00208-011-0762-0. MR2983075

Department of Mathematics, The City University of New York, Staten Island, New York 10314

The Graduate Center, The City University of New York, 365 Fifth Avenue, New York, New York 10016

E-mail address: zheng.huang@csi.cuny.edu

Department of Mathematics, Wesleyan University, Middletown, Connecticut 06459

E-mail address: bwang@wesleyan.edu

Current address: Department of Mathematics and Computer Science, Queensborough Community College, City University of New York, 222-05 56th Avenue, Bayside, New York 11364

E-mail address: biwang@qcc.cuny.edu