MATHEMATICS OF COMPUTATION
Volume 72, Number 243, Pages 1147–1177
S 0025-5718(03)01486-8
Article electronically published on February 3, 2003

FINITE ELEMENT SUPERCONVERGENCE ON SHISHKIN MESH FOR 2-D CONVECTION-DIFFUSION PROBLEMS

ZHIMIN ZHANG

Abstract. In this work, the bilinear finite element method on a Shishkin mesh for convection-diffusion problems is analyzed in the two-dimensional setting. A superconvergence rate $O(N^{-2}\ln^2 N + \epsilon N^{-1.5}\ln N)$ in a discrete ϵ-weighted energy norm is established under certain regularity assumptions. This convergence rate is uniformly valid with respect to the singular perturbation parameter ϵ. Numerical tests indicate that the rate $O(N^{-2}\ln^2 N)$ is sharp for the boundary layer terms. As a by-product, an ϵ-uniform convergence of the same order is obtained for the L^2-norm. Furthermore, under the same regularity assumption, an ϵ-uniform convergence of order $N^{-3/2}\ln^{5/2} N + \epsilon N^{-1}\ln^{1/2} N$ in the L^∞ norm is proved for some mesh points in the boundary layer region.

1. Introduction

There has been extensive research in numerical solutions of singular perturbation problems because of the practical importance of these problems (for example, the Navier-Stokes equations at high Reynolds number). One of the typical behaviors of singularly perturbed problems is the boundary layer phenomenon: the solution varies rapidly within very thin layer regions near the boundary.

Most of the traditional numerical methods fail to catch the rapid change of the solution in boundary layers, and this failure in turn pollutes the numerical approximation on the whole domain. See [18] and [22].

Many methods have been developed to overcome the numerical difficulty caused by boundary layers. The reader is referred to three 1996 books [13, 14, 16] for the significant progress that has been made in this field, and articles [2, 4, 7, 8, 11, 12, 15, 18, 19, 20, 21, 24, 25] for more information.

A realistic approach in practice may be starting with a certain up-winding scheme, such as the streamline-diffusion method, followed by an adaptive procedure to refine the mesh, eventually resolving the boundary layer, and maybe locating some possible internal layers. Then a question arises naturally: Is there any superconvergence phenomenon when the boundary layer is successfully resolved? The current work intends to answer this question for a specific situation.

Received by the editor July 19, 2000 and, in revised form, December 10, 2001.
2000 *Mathematics Subject Classification.* Primary 65N30, 65N15.
Key words and phrases. Convection, diffusion, singularly perturbed, boundary layer, Shishkin mesh, finite element method.
This research was partially supported by the National Science Foundation grants DMS-0074301, DMS-0079743, and INT-0196139.

We shall analyze the standard finite element method combined with one kind of local refinement strategy, namely, the Shishkin mesh. Roughly speaking, the Shishkin mesh is a piecewise uniform mesh with an anisotropic mesh of high ratio in the boundary layer region. The analysis in this paper shows that superconvergence is uniformly valid with respect to the singular perturbation parameter for the bilinear finite element method with the Shishkin mesh for our model problem. This finding is consistent with the symmetry theory [17] in the finite element superconvergence, since for a piecewise uniform mesh there are indeed many symmetries. However, we are not able to apply the symmetry theory directly to convection-diffusion equations because of the use of highly anisotropic meshes. For general theory and new developments of finite element superconvergence, the reader is referred to the recent books [1], [9], [23], and the conference proceedings [6].

Recently, Li and Wheeler have obtained a superconvergence result for the lowest Raviart-Thomas rectangular element in approximating singularly perturbed reaction-diffusion equations in a mixed formulation [8]. By a local postprocessing, the authors are able to prove an $O(N^{-2})$ convergence rate for the gradient. However, we have not seen any superconvergence result for convection-diffusion equations (which is more difficult) in the displacement formulation. In the current work, we consider the standard finite element method for a convection-diffusion model problem,

$$-\epsilon\Delta u + \vec{\beta}\cdot\nabla u + cu = f \quad \text{in} \quad \Omega = (0,1)\times(0,1), \tag{1.1}$$

$$u = 0 \quad \text{on} \quad \partial\Omega, \tag{1.2}$$

where ϵ is a small positive number, $\vec{\beta}(x,y) = (\beta_1(x,y), \beta_2(x,y)) \geq (\alpha,\alpha) > (0,0)$, $c(x,y) \geq 0$ for all $(x,y) \in \bar{\Omega}$, and

$$c(x,y) - \frac{1}{2}\mathrm{div}\vec{\beta}(x,y) \geq c_0 > 0 \tag{1.3}$$

with constants α and c_0. We assume that $\vec{\beta}$, c, and f are sufficiently smooth. These assumptions guarantee that (1.1)–(1.2) has a unique solution in $H^2(\Omega)\cap H_0^1(\Omega)$ for all $f \in L^2(\Omega)$. Note that when ϵ is sufficiently small, condition (1.3) can be ensured by the other hypotheses and a transformation $u = e^{t(x+y)}v$ with a positive constant t that satisfies

$$c(x,y) + (\beta_1(x,y) + \beta_2(x,y))t - 2\epsilon t^2 - \frac{1}{2}\mathrm{div}\vec{\beta}(x,y) \geq c_0.$$

Indeed, it is the case in which ϵ is very small that we are interested in.

With the above assumption, the solution of (1.1)–(1.2) typically has boundary layers of width $O(\epsilon \ln \frac{1}{\epsilon})$ at the outflow boundary $x = 1$ and $y = 1$. With some further assumptions, it is possible to characterize the boundary layers more precisely (see the regularity result in the next section).

Our main concern here is superconvergence in a discrete ϵ-weighted energy norm $\|\cdot\|_{\epsilon,N}$ (see (2.6)) in the presence of exponential boundary layers. We shall establish an error bound of order $N^{-2}\ln^2 N + \epsilon N^{-3/2}$ in the discrete ϵ-weighted energy norm under certain regularity assumptions. For the one-dimensional case, see a recent work of the author [24]. As a consequence of the superconvergence result, we obtain convergence of the same order in the L^2-norm and pointwise convergence of order $N^{-3/2}\ln^{5/2} N + \epsilon N^{-1}\ln^{1/2} N$ at some mesh points inside the boundary layer under the same regularity assumption. These results are all uniformly valid with respect

to ϵ. Furthermore, numerical tests indicate that the estimate $N^{-2}\ln^2 N$ is sharp. It is worth pointing out that the error bounds obtained here are different from the error bounds obtained by Zhou [25] in that the Sobolev norms ($\|u\|_2$ or $\|u\|_3$) of the solution do not appear in the bounding constants.

Recently, Melenk and Schwab have done some work on the p and the hp finite element methods for singularly perturbed problems in the two-dimensional setting. Their mesh design follows earlier work of Schwab and Suri in the one-dimensional reaction-diffusion problem [19], namely, the mesh size $\kappa\epsilon p$ in the exponential boundary layer region is adopted. Here p is the polynomial degree in the finite element space and κ is a user-supplied constant. In [11], a robust exponential convergence rate is established for the reaction-diffusion equation under the analytic assumption on the input data. In [2], similar results are obtained for the dominant components (the smooth part and the layer part) of convection-diffusion problems. So far, a complete regularity analysis on the convection-diffusion equation seems lacking, although the counterpart results for reaction-diffusion problems are relatively rich [3, 5, 12].

Here is the outline of the article. After this brief introduction we introduce the method in Section 2. Section 3 serves as a preliminary to the analysis. In Section 4, we establish all ingredients for the proof of our main theorems, and in Section 5, we present and prove the main theorems. Finally, some numerical results are presented in Section 6. Throughout the article, the standard notation for the Sobolev spaces and norms will be used; and generic constants C, C_i are independent of ϵ and N. An index will be attached to indicate an inner product or a norm on a subdomain, for example, $(\cdot,\cdot)_{\Omega_x}$ and $\|\cdot\|_{\Omega_y}$.

2. The finite element method on a Shishkin mesh

The regularity result. Regularity is a very complicated issue, and most of the known results are for reaction-diffusion equations. See [3], [5], [12], and [16]. Regarding convection-diffusion equations, the reader is referred to [20] and [10]. Here we adopt the result from the latter.

Define the operator $\mathcal{L}_i$, $i = 0, 1$, by

$$\mathcal{L}_i v := \frac{\partial v}{\partial y}\frac{\partial^i}{\partial x^i}\left(\frac{\beta_2}{\beta_1}\right) + v\frac{\partial^i}{\partial x^i}\left(\frac{c}{\beta_1}\right).$$

Lemma 2.1. *Let $\vec{\beta}$ and c be smooth, and let $f \in C^{4,1}(\bar{\Omega})$ satisfy the compatibility conditions*

$$f(0,0) = f(0,1) = f(1,0) = f(1,1) = 0,$$

and

$$\left(\frac{f}{\beta_1}\right)_y(0,0) = \left(\frac{f}{\beta_2}\right)_x(0,0),$$

$$\left(\left(\frac{f}{\beta_1}\right)_x - \mathcal{L}_0\left(\frac{f}{\beta_1}\right)\right)_y(0,0) = \left(\frac{f}{\beta_2}\right)_{xx}(0,0),$$

$$\left(\left(\frac{f}{\beta_1}\right)_{xx} - \mathcal{L}_0\left(\left(\frac{f}{\beta_1}\right)_x - \mathcal{L}_0\left(\frac{f}{\beta_1}\right)\right) - 2\mathcal{L}_1\left(\frac{f}{\beta_1}\right)\right)_y(0,0) = \left(\frac{f}{\beta_2}\right)_{xxx}(0,0),$$

$$\left(\beta_2\left(\frac{f}{\beta_2}\right)_{xx}\right)(0,0) = \left(\beta_1\left(\frac{f}{\beta_1}\right)_{yy}\right)(0,0).$$

Then the boundary problem (1.1)–(1.2) *has a classical solution* $u \in C^{3,1}(\Omega)$ *which can be decomposed into*

$$u = \bar{u} + w_0 + w_1 + w_2,$$

where for all $(x, y) \in \Omega$ *we have*

$$\left| \frac{\partial^{i+j} \bar{u}}{\partial x^i \partial y^j}(x, y) \right| \le C \tag{2.1}$$

for $0 \le i + j \le 2$ *and*

$$\left| \frac{\partial^{i+j} w_1}{\partial x^i \partial y^j}(x, y) \right| \le C\epsilon^{-i} e^{-\alpha(1-x)/\epsilon}, \tag{2.2}$$

$$\left| \frac{\partial^{i+j} w_2}{\partial x^i \partial y^j}(x, y) \right| \le C\epsilon^{-j} e^{-\alpha(1-y)/\epsilon}, \tag{2.3}$$

$$\left| \frac{\partial^{i+j} w_0}{\partial x^i \partial y^j}(x, y) \right| \le C\epsilon^{-(i+j)} e^{-\alpha(1-x)/\epsilon} e^{-\alpha(1-y)/\epsilon} \tag{2.4}$$

for $0 \le i + j \le 3$. *Here the constant* C *depends on various norms of* $\vec{\beta}$, c *and* f.

See [10, Theorem 5.1] for details. Note that when

$$\frac{\partial^{i+j} f}{\partial x^i \partial y^j}(0, 0) = 0, \qquad 1 \le i + j \le 3,$$

then the last four compatibility conditions of Lemma 2.1 are satisfied.

The Shishkin mesh. Define the transition parameter

$$\tau = \min(\frac{1}{2}, \frac{\kappa}{\alpha}\epsilon \ln N)$$

with $\kappa = 2.5$, and divide Ω into four subdomains

$$\Omega_0 = (0, 1 - \tau)^2, \quad \Omega_x = (1 - \tau, 1) \times (0, 1 - \tau),$$

$$\Omega_y = (0, 1 - \tau) \times (1 - \tau, 1), \quad \Omega_{xy} = (1 - \tau, 1)^2.$$

Each subdomain is then decomposed into $N \times N$ ($N \ge 2$) uniform rectangles (see Figure 1). Therefore, there are $(2N + 1)^2$ nodes (x_i, y_j), $i, j = 0, 1, 2, \ldots, 2N$, and $4N^2$ elements

$$\Omega_{ij} = (x_{i-1}, x_i) \times (y_{j-1}, y_j), \quad j = 1, 2, \ldots, 2N.$$

We denote

$$H = \frac{1 - \tau}{N}, \quad h = \frac{\tau}{N}.$$

In the later analysis, we assume that $\tau = \dfrac{2.5}{\alpha}\epsilon \ln N$, since otherwise N^{-1} is much less than ϵ and the traditional finite element analysis can be applied. For small ϵ, the Shishkin mesh is highly graded with ratio of $H/h = O(\epsilon^{-1})$. It is neither regular nor quasi-uniform.

The parameter τ is selected so as to deal with the singular behavior of the boundary layer functions w_1, w_2, and w_0. In the boundary layer region, the small mesh size compensates for the sharp change of the solution. We see that

$$\frac{h}{\epsilon} = \frac{2.5}{\alpha} \frac{\ln N}{N}.$$

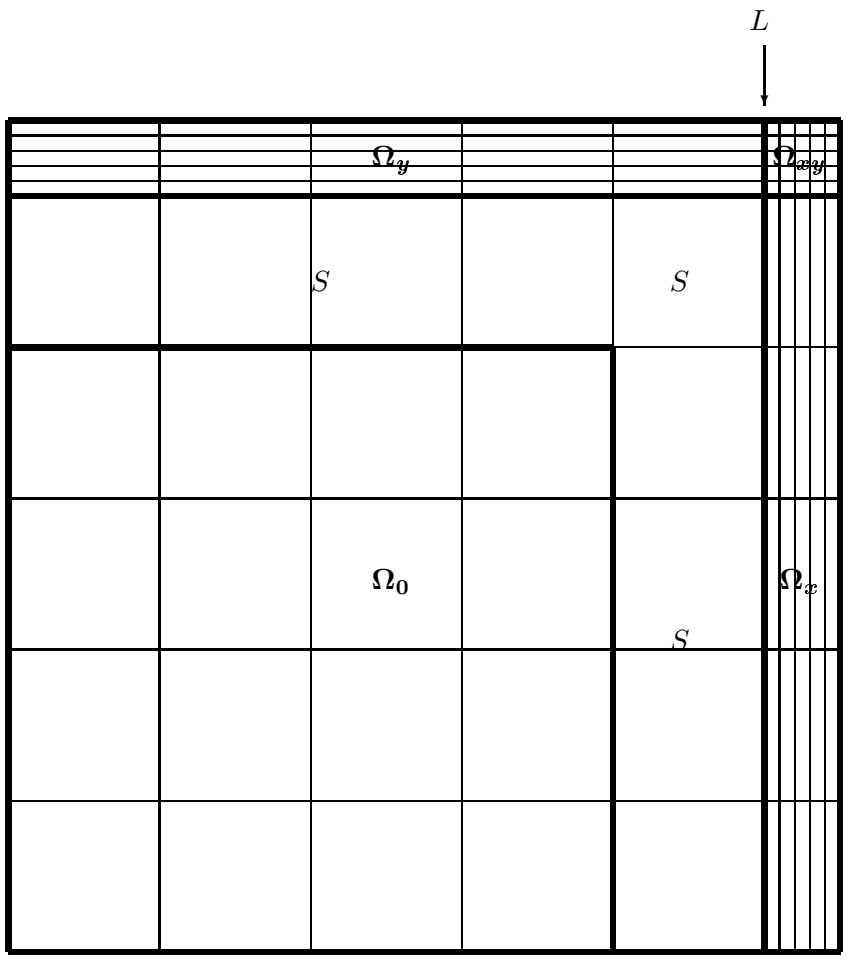

FIGURE 1. The Shishkin mesh

Outside the boundary layer, the exponential decay of w_1, w_2, and w_0 dominate:

$$\int_0^{1-\tau} e^{-\alpha(1-x)/\epsilon} dx \leq \frac{\epsilon}{\alpha} e^{-\alpha\tau/\epsilon} = \frac{\epsilon}{\alpha} e^{\ln N^{-2.5}} = \frac{\epsilon}{\alpha N^{2.5}}.$$

In the analysis, these facts are used repeatedly.

Remark 2.1. In the literature, $\kappa = 2$ is widely used in determining the transition point for the Shishkin mesh. Our numerical results reveal the same convergent rates for $\kappa = 1.5$, $\kappa = 2$, and $\kappa = 2.5$. However, $\kappa = 2$ has a better error distribution than the other nearby numbers (see Section 6). For technical reasons, we use $\kappa = 2.5$ in our analysis.

Variational formulation. The weak formulation of the model problem (1.1)–(1.2) reads: Find $u \in H_0^1(\Omega)$ such that

$$B_\epsilon(u, v) = f(v), \quad \forall v \in H_0^1(\Omega),$$

where

$$B_\epsilon(u,v) = \epsilon(\nabla u, \nabla v) + (\vec{\beta}\cdot\nabla u, v) + (cu, v), \quad f(v) = (f,v) = \int_\Omega f v dx dy.$$

We define an energy norm $\|\cdot\|_\epsilon$ by

$$\|v\|_\epsilon^2 = \epsilon\|\nabla v\|^2 + \|v\|^2 = |v|_\epsilon^2 + \|v\|^2,$$

where $\|\cdot\|$ is the L^2-norm. We have, from integration by parts and applying (1.3),

$$B_\epsilon(v,v) = \epsilon(\nabla v, \nabla v) + ((c - \frac{1}{2}\mathrm{div}\vec{\beta})v, v) \geq |v|_\epsilon^2 + c_0\|v\|^2 \geq \min(1, c_0)\|v\|_\epsilon^2. \tag{2.5}$$

Let $V_\epsilon^N \subset H_0^1(\Omega)$ be the C^0 bilinear finite element space on the Shishkin mesh; we look for $u^N \in V_\epsilon^N$ such that

$$B_\epsilon(u^N, v) = f(v), \quad \forall v \in V_\epsilon^N.$$

We define a discrete energy norm $\|\cdot\|_{\epsilon,N}$ by

$$\|v\|_{\epsilon,N}^2 = |v|_{\epsilon,N}^2 + \|v\|^2 \tag{2.6}$$

with

$$|v|_{\epsilon,N}^2 = \epsilon\sum_K 4h_K\hbar_K|\nabla v(x_K, y_K)|^2.$$

Here $K = (x_K - h_K, x_K + h_K) \times (y_K - \hbar_K, y_K + \hbar_K)$ is an element (see Figure 2). For the Shishkin mesh, $2h_K, 2\hbar_K$ are either h or H.

Main task and difficulties. The main task is to establish the approximability of the bilinear finite element space to functions with exponential terms of arbitrarily large parameters in the energy norm as well as in the discrete energy norm (2.6). There are two difficulties: (i) The bilinear form B_ϵ does not satisfy the uniform stability

$$|B_\epsilon(u,v)| \leq C\|u\|_\epsilon\|v\|_\epsilon$$

for a constant C independent of ϵ, although it does satisfy the coercivity condition (2.5). (ii) The bilinear interpolant u^I of the solution u cannot be uniformly bounded by u in either the L_2-norm or the H^1-norm as

$$\|u^I\| \leq C\|u\|, \quad \|\nabla u^I\| \leq C\|\nabla u\|.$$

for a constant C independent of ϵ. However, all the error bounds must be ϵ-uniform. The standard finite element analysis cannot produce the expected result, and the situation is further complicated by the superconvergent consideration. In this work we shall use a different framework to overcome these difficulties. Furthermore, integral identities developed in the 90's (see the Appendix) are used to prove superconvergence. The analysis is very delicate.

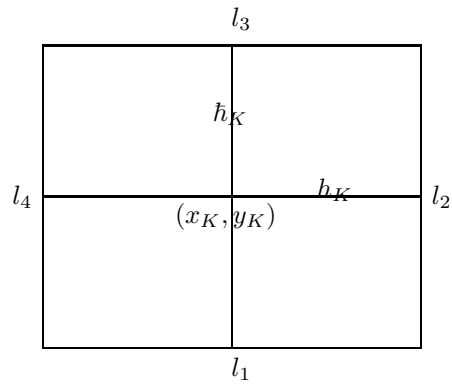

FIGURE 2. Geometry of the element K

3. Preliminaries

On an individual rectangular element K (see Figure 2), $v \in V_\epsilon^N$ is defined as

$$v(x_K + h_K\xi, y_K + \hbar_K\eta) = \frac{v_1^K}{4}(1-\xi)(1-\eta) + \frac{v_2^K}{4}(1+\xi)(1-\eta)$$
$$+ \frac{v_3^K}{4}(1+\xi)(1+\eta) + \frac{v_4^K}{4}(1-\xi)(1+\eta) = \hat{v}(\xi,\eta), \quad (\xi,\eta) \in \widehat{K} = [-1,1]^2,$$

where

$$v_1^K = v(x_K - h_K, y_K - \hbar_K), \quad v_2^K = v(x_K + h_K, y_K - \hbar_K),$$
$$v_3^K = v(x_K + h_K, y_K + \hbar_K), \quad v_4^K = v(x_K - h_K, y_K + \hbar_K).$$

As a preliminary, we first introduce some inequalities for $v \in V_\epsilon^N$ that will be used in the analysis. Their proofs are straightforward calculations, and hence are omitted. There are general results for most of these inequalities; however, the results here provide specific information about the bounding constants which may not appear elsewhere.

Imbedding inequalities:

$$\left(\int_{l_2^K} + \int_{l_4^K}\right) v^2 dy \le \frac{9}{h_K}\int_K v^2 dxdy, \quad \left(\int_{l_1^K} + \int_{l_3^K}\right) v^2 dx \le \frac{9}{\hbar_K}\int_K v^2 dxdy. \tag{3.1}$$

Inverse inequalities:

$$\int_K \left(\frac{\partial v}{\partial x}\right)^2 dxdy \le \frac{9}{h_K^2}\int_K v^2 dxdy, \quad \int_K \left(\frac{\partial v}{\partial y}\right)^2 dxdy \le \frac{9}{\hbar_K^2}\int_K v^2 dxdy; \tag{3.2}$$

$$\int_K \left(\frac{\partial^2 v}{\partial x \partial y}\right)^2 dxdy \le \frac{3}{2\hbar_K^2}\int_K \left(\frac{\partial v}{\partial x}\right)^2 dxdy, \quad \text{or} \quad \le \frac{3}{2h_K^2}\int_K \left(\frac{\partial v}{\partial y}\right)^2 dxdy. \tag{3.3}$$

Stability inequality:

$$\|v\|_{\epsilon,N} \le \|v\|_\epsilon. \tag{3.4}$$

Discrete inequalities:

$$\int_K v^2 dxdy \le h_K \hbar_K [(v_1^K)^2 + (v_2^K)^2 + (v_3^K)^2 + (v_4^K)^2], \tag{3.5}$$

$$\int_K |\nabla v|^2 dxdy \le \left(\frac{H}{h} + \frac{h}{H}\right) [(v_1^K)^2 + (v_2^K)^2 + (v_3^K)^2 + (v_4^K)^2]. \tag{3.6}$$

In this article, we shall frequently use the bilinear interpolation w^I of a given function w. We start from two identities which again can be derived through simple calculation. When $w \in W^1_\infty(\Omega)$,

$$\frac{\partial w^I}{\partial x}(x_K, y_K) = \frac{1}{4h_K} \int_{x_K - h_K}^{x_K + h_K} \left(\frac{\partial w}{\partial x}(x, y_K - \hbar_K) + \frac{\partial w}{\partial x}(x, y_K + \hbar_K)\right) dx, \tag{3.7}$$

$$\frac{\partial w^I}{\partial y}(x_K, y_K) = \frac{1}{4\hbar_K} \int_{y_K - \hbar_K}^{y_K + \hbar_K} \left(\frac{\partial w}{\partial y}(x_K + h_K, y) + \frac{\partial w}{\partial y}(x_K - h_K, y)\right) dy; \tag{3.8}$$

and if $w \in W^3_\infty(\Omega)$, we have

$$\begin{aligned} &\frac{\partial}{\partial x}(w^I - w)(x_K, y_K) \\ &= \frac{1}{4h_K} \int_{-h_K}^{h_K} \left[\left(\frac{t^2}{2}\frac{\partial^3 w}{\partial x^3} - t\hbar_K \frac{\partial^3 w}{\partial x^2 \partial y} + \frac{\hbar_K^2}{2}\frac{\partial^3 w}{\partial x \partial y^2}\right)(x_K + s_1 t, y_K - s_1 \hbar_K)\right. \\ &\left. + \left(\frac{t^2}{2}\frac{\partial^3 w}{\partial x^3} + t\hbar_K \frac{\partial^3 w}{\partial x^2 \partial y} + \frac{\hbar_K^2}{2}\frac{\partial^3 w}{\partial x \partial y^2}\right)(x_K + s_2 t, y_K + s_2 \hbar_K)\right] dt, \end{aligned} \tag{3.9}$$

$$\begin{aligned} &\frac{\partial}{\partial y}(w^I - w)(x_K, y_K) \\ &= \frac{1}{4\hbar_K} \int_{-\hbar_K}^{\hbar_K} \left[\left(\frac{h_K^2}{2}\frac{\partial^3 w}{\partial x^2 \partial y} - h_K t \frac{\partial^3 w}{\partial x \partial y^2} + \frac{t^2}{2}\frac{\partial^3 w}{\partial y^3}\right)(x_K - s_3 h_K, y_K + s_3 t)\right. \\ &\left. + \left(\frac{h_K^2}{2}\frac{\partial^3 w}{\partial x^2 \partial y} + h_K \frac{\partial^3 w}{\partial x \partial y^2} + \frac{t^2}{2}\frac{\partial^3 w}{\partial y^3}\right)(x_K + s_4 h_K, y_K + s_4 t)\right] dt, \end{aligned} \tag{3.10}$$

where $0 < s_i < 1$ for $i = 1, 2, 3, 4$. Also,

$$\|w - w^I\|_K^2 \le C(\|h_K^2 \frac{\partial^2 w}{\partial x^2}\|_K^2 + \|h_K \hbar_K \frac{\partial^2 w}{\partial x \partial y}\|_K^2 + \|\hbar_K^2 \frac{\partial^2 w}{\partial y^2}\|_K^2), \tag{3.11}$$

where C is a constant independent of h_K, $\hbar_K$, and w.

Finally, we list some inequalities regarding the exponential boundary layer functions which will be frequently used in the next section.

$$2h_K e^{-2\alpha(1-x_K)/\epsilon} < \int_{x_K - h_K}^{x_K + h_K} e^{-2\alpha(1-x)/\epsilon} dx; \tag{3.12}$$

$$2\hbar_K e^{-2\alpha(1-y_K)/\epsilon} < \int_{y_K - \hbar_K}^{y_K + \hbar_K} e^{-2\alpha(1-y)/\epsilon} dy; \tag{3.13}$$

$$\|e^{-\alpha(1-x)/\epsilon}\|_\Omega^2 + \|e^{-\alpha(1-y)/\epsilon}\|_\Omega^2$$

$$= \int_\Omega (e^{-2\alpha(1-x)/\epsilon} + e^{-2\alpha(1-y)/\epsilon}) dxdy < \frac{\epsilon}{\alpha}; \tag{3.14}$$

$$\|e^{-\alpha(1-x)/\epsilon}\|^2_{\Omega_0\cup\Omega_y} + \|e^{-\alpha(1-y)/\epsilon}\|^2_{\Omega_0\cup\Omega_x}$$

$$= \int_{\Omega_0\cup\Omega_y} e^{-2\alpha(1-x)/\epsilon} dxdy + \int_{\Omega_0\cup\Omega_x} e^{-2\alpha(1-y)/\epsilon} dxdy < \frac{\epsilon}{\alpha}\frac{1}{N^5}; \tag{3.15}$$

$$h \sum_{i=N+1}^{2N} e^{-2\alpha(1-x_i)/\epsilon} < \frac{\epsilon}{\alpha}; \tag{3.16}$$

$$H \sum_{i=1}^{N} e^{-2\alpha(1-x_i)/\epsilon} < \left(\frac{\epsilon}{\alpha} + 2H\right)\frac{1}{N^5}. \tag{3.17}$$

Note that the order N^{-5} is due to the choice $\kappa = 2.5$.

4. Analysis

This is the section where all ingredients for the proof of our main theorems in Section 5 will be established. All results are uniformly valid for $\epsilon \in (0, 1]$ and $N \geq 2$. We only consider the case when $\tau < 1/2$ as mentioned earlier, since otherwise the traditional analysis will do the work.

We shall treat the singular terms $w = w_0 + w_1 + w_2$ and the regular term $\bar{u}$ separately. It is worthwhile to point out that the superconvergence analysis of the regular term $\bar{u}$ does not follow from the general result of the counterpart regular problem ($\epsilon = 1$) in the literature. Indeed, the large mesh ratio between boundary layer elements and non-boundary layer elements breaks the crucial assumption that the mesh should be "almost" uniform in the traditional superconvergence analysis.

In dealing with the singular terms, we utilize the exponential decay property outside the boundary layer region and estimate the interpolation error inside the boundary layer regions. By the symmetric nature of the problem, we only provide a detailed proof for w_1, omit the proof of w_2 (from symmetry, the proof will be the same as for w_1 by exchanging the indices x and y), and sketch the proof for w_0 (the proof of w_0 shares many features with that of w_1).

Theorem 4.1. *Let $w = w_0 + w_1 + w_2$ satisfy the regularity* (2.2)–(2.4)*. Then there is a constant C, independent of N and ϵ, such that*

$$\epsilon \sum_{K\subset\Omega} 4h_K\hbar_K|\nabla(w - w^I)(x_K, y_K)|^2 \leq C\left(\frac{\ln N}{N}\right)^4.$$

Proof. Based on the boundary layer behavior of w_1, we separate the discussion into the cases of $\Omega_x \cup \Omega_{xy}$ and $\Omega_0 \cup \Omega_y$.

(a) $K \subset \Omega_x \cup \Omega_{xy}$. Applying the regularity result (2.2) to (3.9) and (3.10), we derive

$$\begin{aligned} & |\nabla(w_1 - w_1^I)(x_K, y_K)| \\ \leq\ & Ce^{-\alpha(1-x_K-h_K)/\epsilon}\left(\frac{h_K^2}{2}(\epsilon^{-3} + \epsilon^{-2}) + h_K\hbar_K(\epsilon^{-2} + \epsilon^{-1}) + \frac{\hbar_K^2}{2}(\epsilon^{-1} + 1)\right) \\ \leq\ & Ce^{-\alpha(1-x_K-h_K)/\epsilon}\left(h_K^2\epsilon^{-3} + 2h_K\hbar_K\epsilon^{-2} + \hbar_K^2\epsilon^{-1}\right). \end{aligned}$$

Adding all elements on $\Omega_x \cup \Omega_{xy}$ yields

$$\begin{aligned}
& \epsilon \sum_{K\subset\Omega_x\cup\Omega_{xy}} 4h_K\hbar_K|\nabla(w_1-w_1^I)(x_K,y_K)|^2 \\
\leq\ & C\epsilon\sum_{j=1}^{2N}\hbar_j\sum_{i=N+1}^{2N} he^{-2\alpha(1-x_i)/\epsilon}\left(h^2\epsilon^{-3}+2hH\epsilon^{-2}+H^2\epsilon^{-1}\right)^2 \\
\leq\ & \frac{C}{\alpha}\left(\left(\frac{h}{\epsilon}\right)^2+2\frac{h}{\epsilon}H+H^2\right)^2 \\
=\ & \frac{C}{\alpha}\left(\frac{h}{\epsilon}+H\right)^4 \leq C_1\left(\frac{\ln N}{N}\right)^4. \qquad (4.1)
\end{aligned}$$

Here we have used (3.16).

(b) $K\in\Omega_0\cup\Omega_y$. By the regularity (2.2), we have

$$\begin{aligned}
4h_K\hbar_K|\nabla w_1(x_K,y_K)|^2 &\leq C4h_K\hbar_K(\epsilon^{-2}+1)e^{-2\alpha(1-x_K)/\epsilon} \\
&< C(\epsilon^{-2}+1)\int_K e^{-2\alpha(1-x)/\epsilon}dxdy. \qquad (4.2)
\end{aligned}$$

Here we have used (3.12). Summing up all elements on $\Omega_0\cup\Omega_y$ yields

$$\begin{aligned}
& \epsilon\sum_{K\subset\Omega_0\cup\Omega_y} 4h_K\hbar_K|\nabla w_1(x_K,y_K)|^2 \\
\leq\ & C(\epsilon^{-1}+\epsilon)\int_0^1 dy\int_0^{1-\tau} e^{-2\alpha(1-x)/\epsilon}dx \leq \frac{C}{2\alpha}(1+\epsilon^2)\frac{1}{N^5}. \qquad (4.3)
\end{aligned}$$

The argument for w_1^I is more involved. We first use (3.7) and the regularity of w_1 to derive

$$\begin{aligned}
\left|\frac{\partial w_1^I}{\partial x}(x_K,y_K)\right| &\leq \frac{\epsilon^{-1}}{2h_K}\int_{x_K-h_K}^{x_K+h_K} e^{-\alpha(1-x)/\epsilon}dx \\
&\leq \frac{C\epsilon^{-1}}{\sqrt{2h_K}}\left(\int_{x_K-h_K}^{x_K+h_K} e^{-2\alpha(1-x)/\epsilon}dx\right)^{1/2},
\end{aligned}$$

and therefore,

$$\begin{aligned}
& \epsilon\sum_{K\subset\Omega_0\cup\Omega_y} 4h_K\hbar_K\left|\frac{\partial w_1^I}{\partial x}(x_K,y_K)\right|^2 \\
\leq\ & C\epsilon^{-1}\sum_{K\subset\Omega_0\cup\Omega_y} 2\hbar_K\int_{x_K-h_K}^{x_K+h_K} e^{-2\alpha(1-x)/\epsilon}dx \\
=\ & C\epsilon^{-1}\sum_{j=1}^{2N}\hbar_j\int_0^{1-\tau} e^{-2\alpha(1-x)/\epsilon}dx \leq \frac{C}{\alpha N^5}. \qquad (4.4)
\end{aligned}$$

Next, using (3.8), we find that

$$\begin{aligned}
\left|\frac{\partial w_1^I}{\partial y}(x_K,y_K)\right| &\leq \frac{C}{2}(e^{-\alpha(1-x_K+h_K)/\epsilon}+e^{-\alpha(1-x_K-h_K)/\epsilon}) \\
&\leq Ce^{-\alpha(1-x_K-h_K)/\epsilon}.
\end{aligned}$$

Summing up, we obtain

$$\begin{aligned} & \epsilon \sum_{K\subset\Omega_0\cup\Omega_y} 4h_K\hbar_K|\frac{\partial w_1^I}{\partial y}(x_K,y_K)|^2 \\ \leq\ & C\epsilon\sum_{j=1}^{2N}\hbar_j\sum_{i=1}^{N}He^{-2\alpha(1-x_i)/\epsilon} \leq C\frac{\epsilon}{N^5}\left(\frac{\epsilon}{\alpha}+2H\right). \end{aligned} \tag{4.5}$$

Here we used (3.17). Combining (4.4) and (4.5) with (4.3), we get

$$\epsilon \sum_{K\subset\Omega_0\cup\Omega_y} 4h_K\hbar_K|\nabla(w_1-w_1^I)(x_K,y_K)|^2 \leq \frac{C}{N^5}.$$

This, combined with (4.1), establishes the conclusion for w_1. The argument for w_2 is similar.

The proof for w_0 is separated into the cases of Ω_{xy} (where we estimate the interpolation error) and $\Omega\setminus\Omega_{xy}$ (where the exponential decay property is utilized).

(a′) $K\subset\Omega_{xy}$ (where $h_K=\hbar_K=h/2$). We apply the identities (3.9) and (3.10) to w_0 and recall (2.4) to derive

$$\begin{aligned} & 4h_K\hbar_K|\nabla(w_0-w_0^I)(x_K,y_K)|^2 \\ \leq\ & Ch^6\epsilon^{-6}e^{-2\alpha(1-x_K-h_K)/\epsilon}e^{-2\alpha(1-y_K-\hbar_K)/\epsilon} \\ =\ & Ch^6\epsilon^{-6}e^{2\alpha h/\epsilon}e^{-2\alpha(1-x_K)/\epsilon}e^{-2\alpha(1-y_K)/\epsilon}. \end{aligned}$$

Note that $e^{2\alpha h/\epsilon}=\sqrt[N]{N^5}$ is a bounded number. Summing up and using (3.12) and (3.13), we have

$$\begin{aligned} & \epsilon\sum_{K\subset\Omega_{xy}} 4h_K\hbar_K|\nabla(w_0-w_0^I)(x_K,y_K)|^2 \\ \leq\ & Ch^4\epsilon^{-5}\int_{1-\tau}^{1}e^{-2\alpha(1-x)/\epsilon}dx\int_{1-\tau}^{1}e^{-2\alpha(1-y)/\epsilon}dy \\ \leq\ & \frac{C}{4\alpha^2}h^4\epsilon^{-3} \leq C_1\epsilon\left(\frac{\ln N}{N}\right)^4. \end{aligned} \tag{4.6}$$

(b′) $K\subset\Omega\setminus\Omega_{xy}$. By the regularity (2.4),

$$\begin{aligned} & 4h_K\hbar_K|\nabla w_0(x_K,y_K)|^2 \\ \leq\ & C4h_K\hbar_K\epsilon^{-2}e^{-2\alpha(1-x_K)/\epsilon}e^{-2\alpha(1-y_K)/\epsilon} \\ \leq\ & C\epsilon^{-2}\int_{x_K-h_K}^{x_K+h_K}e^{-2\alpha(1-x)/\epsilon}dx\int_{y_K-\hbar_K}^{y_K+\hbar_K}e^{-2\alpha(1-y)/\epsilon}dy \\ =\ & C\epsilon^{-2}\int_K e^{-2\alpha(1-x)/\epsilon}e^{-2\alpha(1-y)/\epsilon}dxdy. \end{aligned}$$

Here we used (3.12) and (3.13). Summing up, we have

$$\begin{aligned}
& \epsilon \sum_{K\subset\Omega\setminus\Omega_{xy}} 4h_K\hbar_K|\nabla w_0(x_K,y_K)|^2 \\
= \; & \epsilon \left(\sum_{K\subset\Omega_0\cup\Omega_x} + \sum_{K\subset\Omega_y} \right) 4h_K\hbar_K|\nabla w_0(x_K,y_K)|^2 \\
\leq \; & C\epsilon^{-1}\left(\int_0^1 dx \int_0^{1-\tau} dy + \int_0^{1-\tau} dx \int_{1-\tau}^1 dy \right) e^{-2\alpha(1-x)/\epsilon} e^{-2\alpha(1-y)/\epsilon} \\
\leq \; & \frac{C\epsilon}{2\alpha^2}\frac{1}{N^5}. \qquad (4.7)
\end{aligned}$$

Next, we consider ∇w_0^I. It is suffice to discuss $K\subset\Omega_0\cup\Omega_y$, since the situation on Ω_x is the same as on Ω_y. Applying (3.7) to w_0 and following the same argument as for w_1 in (b), we have

$$\epsilon \sum_{K\subset\Omega_0\cup\Omega_y} 4h_K\hbar_K \left|\frac{\partial w_0^I}{\partial x}(x_K,y_K)\right|^2 \leq \frac{C}{N^5}. \qquad (4.8)$$

Now, we apply (3.8) to w_0 and use the regularity to obtain

$$\begin{aligned}
\left|\frac{\partial w_0^I}{\partial y}(x_K,y_K)\right| \; & \leq \; \frac{C\epsilon^{-1}}{2\hbar_K}\int_{y_K-\hbar_K}^{y_K+\hbar_K} e^{-\alpha(1-x_K-h_K)/\epsilon} e^{-\alpha(1-y)/\epsilon} dy \\
& \leq \; \frac{C\epsilon^{-1}}{\sqrt{2\hbar_K}} e^{-\alpha(1-x_K-h_K)/\epsilon} \left(\int_{y_K-\hbar_K}^{y_K+\hbar_K} e^{-2\alpha(1-y)/\epsilon} dy \right)^{1/2}.
\end{aligned}$$

In the last step, we used Hölder's inequality. Summing up, we have

$$\begin{aligned}
& \epsilon \sum_{K\subset\Omega_0\cup\Omega_y} 4h_K\hbar_K \left|\frac{\partial w_0^I}{\partial y}(x_K,y_K)\right|^2 \\
\leq \; & C\epsilon^{-1} \sum_{K\subset\Omega_0\cup\Omega_y} \int_{y_K-\hbar_K}^{y_K+\hbar_K} e^{-2\alpha(1-y)/\epsilon} dy h_K e^{-2\alpha(1-x_K-h_K)/\epsilon} \\
= \; & C\epsilon^{-1}\int_0^1 e^{-2\alpha(1-y)/\epsilon} dy \sum_{i=1}^N H e^{-2\alpha(1-x_i)/\epsilon} \\
\leq \; & \frac{C}{\alpha}\left(\frac{\epsilon}{\alpha}+\frac{2}{N}\right)\frac{1}{N^5}. \qquad (4.9)
\end{aligned}$$

Here we have used (3.17). Combining (4.8) and (4.9) yields

$$\epsilon \sum_{K\subset\Omega_0\cup\Omega_y} 4h_K\hbar_K|\nabla w_0^I(x_K,y_K)|^2 \leq \frac{C}{N^5}.$$

As we mentioned earlier, the argument for Ω_x is the same as that of Ω_y, and hence

$$\epsilon \sum_{K\subset\Omega\setminus\Omega_{xy}} 4h_K\hbar_K|\nabla w_0^I(x_K,y_K)|^2 \leq \frac{C}{N^5}.$$

Recalling (4.7), we get

$$\epsilon \sum_{K\subset\Omega\setminus\Omega_{xy}} 4h_K\hbar_K|\nabla(w_0-w_0^I)(x_K,y_K)|^2 \le \frac{C}{N^5},$$

which, combined with the estimate in (a′), establishes the assertion for w_0. □

In the proof of our next theorem, a layer region adjacent to the transition line but outside the boundary layer is used (see Figure 1):

$$S=\{(x,y)\in\Omega_0 \mid \ x\ge 1-\tau-H, \ \text{ or } \ y\ge 1-\tau-H\}.$$

Theorem 4.2. *Let $w=w_0+w_1+w_2$ satisfy the regularity* (2.2)–(2.4)*. Then there is a constant C, independent of N and ϵ, such that*

$$\|w-w^I\|_{\Omega\setminus\Omega_0} \le C\sqrt{\epsilon}\left(\frac{\ln N}{N}\right)^2; \tag{4.10}$$

$$\|w\|_{\Omega_0}+\|w^I\|_{\Omega_0\setminus S} \le C\sqrt{\epsilon}N^{-2.5}; \tag{4.11}$$

$$\|w^I\|_S \le \frac{C}{N^3}. \tag{4.12}$$

Proof. By the regularity assumption (2.2), we derive

$$\|\frac{\partial^2 w_1}{\partial x^2}\|^2_{\Omega_x\cup\Omega_{xy}} \le C\epsilon^{-4}\int_0^1 dy\int_{1-\tau}^1 e^{-2\alpha(1-x)/\epsilon}dx \le \frac{C}{2\alpha}\epsilon^{-3};$$

and similarly,

$$\|\frac{\partial^2 w_1}{\partial x\partial y}\|^2_{\Omega_x\cup\Omega_{xy}} \le \frac{C}{2\alpha}\epsilon^{-1}, \quad \|\frac{\partial^2 w_1}{\partial y^2}\|^2_{\Omega_x\cup\Omega_{xy}} \le \frac{C}{2\alpha}\epsilon.$$

Adding all elements over $\Omega_x\cup\Omega_{xy}$ on both sides of (3.11) yields

$$\|w_1-w_1^I\|^2_{\Omega_x\cup\Omega_{xy}} \le \frac{C\epsilon}{2\alpha}(h^4\epsilon^{-4}+2h^2\epsilon^{-2}H^2+H^4) \le C_1\epsilon\left(\frac{\ln N}{N}\right)^4. \tag{4.13}$$

Furthermore,

$$\|w_1\|^2_{\Omega_0\cup\Omega_y} \le C\int_0^1 dy\int_0^{1-\tau} e^{-2\alpha(1-x)/\epsilon}dx \le \frac{C}{2\alpha}\frac{\epsilon}{N^5}; \tag{4.14}$$

$$\|w_1^I\|^2_{\Omega_y} \le C\sum_{i=1}^N He^{-2\alpha(1-x_i)/\epsilon}\sum_{j=N+1}^{2N}\hbar_j \le C_1(\epsilon+N^{-1})\frac{\tau}{N^5}. \tag{4.15}$$

Here we used (3.17). Clearly,

$$\|w-w^I\|_{\Omega_y} \le \|w\|_{\Omega_y}+\|w^I\|_{\Omega_y} \le C\frac{\sqrt{\epsilon}}{N^{2.5}}.$$

Recall (4.13), and we have established (4.10) for w_1. Next,

$$\begin{aligned}\|w_1^I\|^2_{\Omega_0\setminus S} &\le C\sum_{i=0}^{N-1}\sum_{j=0}^{N-1}H^2e^{-2\alpha(1-x_i)/\epsilon}\\ &\le C\int_0^{1-\tau}\int_0^{1-\tau}e^{-2\alpha(1-x)/\epsilon}dxdy \le \frac{C\epsilon}{N^5},\end{aligned}$$

which, combined with (4.14), proves (4.11) for w_1. Finally,

$$\|w_1^I\|_S^2 = \sum_{K\subset S} \|w_1^I\|_K^2 \le CNH^2 e^{-2\alpha\tau/\epsilon} \le \frac{C}{N^6},$$

which establishes (4.12) for w_1.

The estimate for w_2 is the same. The estimate for w_0 will be separated into the four cases Ω_{xy}, $\Omega_x \cup \Omega_y$, $\Omega_0 \setminus S$, and S. For example, we have

$$\begin{aligned} \|w_0 - w_0^I\|_{\Omega_{xy}}^2 &\le C_1 h^4 |w_0|_{2,\Omega_{xy}}^2 \\ &\le C_2 h^4 \epsilon^{-4} \int_{1-\tau}^1 \int_{1-\tau}^1 e^{-2\alpha(1-x)/\epsilon} e^{-2\alpha(1-y)/\epsilon} dxdy \\ &\le \frac{C_2}{4\alpha^2} h^4 \epsilon^{-2} \le C_3 \epsilon^2 \left(\frac{\ln N}{N}\right)^4; \end{aligned} \tag{4.16}$$

$$\|w_0\|_{\Omega\setminus\Omega_{xy}}^2 \le C \int_{\Omega\setminus\Omega_{xy}} e^{-2\alpha(1-x)/\epsilon} e^{-2\alpha(1-y)/\epsilon} dxdy \le \frac{C}{2\alpha^2}\frac{\epsilon^2}{N^5}.$$

$$\begin{aligned} \|w_0^I\|_{\Omega_x\cup\Omega_y}^2 &\le C \left(\sum_{i=1}^N H e^{-2\alpha(1-x_i)/\epsilon} \sum_{j=N+1}^{2N} \hbar_j \right. \\ &\qquad \left. + \sum_{j=1}^N H e^{-2\alpha(1-y_j)/\epsilon} \sum_{i=N+1}^{2N} h_i \right) \\ &\le C\left(\frac{\epsilon}{\alpha} + 2H\right)\frac{\tau}{N^5}. \end{aligned} \tag{4.17}$$

The rest of the argument is the same as for w_1. □

Before the proof of the next two theorems, we introduce two integral identities from [9]:

$$\begin{aligned} &\int_K \frac{\partial}{\partial x}(w - w^I)\frac{\partial v}{\partial x} dxdy \\ &= \int_K \frac{\partial^3 w}{\partial x \partial y^2} F(y) \left(\frac{\partial v}{\partial x} - \frac{2}{3}(y - y_K)\frac{\partial^2 v}{\partial x \partial y} \right) dxdy, \end{aligned} \tag{4.18}$$

$$\begin{aligned} &\int_K \frac{\partial}{\partial y}(w - w^I)\frac{\partial v}{\partial y} dxdy \\ &= \int_K \frac{\partial^3 w}{\partial x^2 \partial y} E(x) \left(\frac{\partial v}{\partial y} - \frac{2}{3}(x - x_K)\frac{\partial^2 v}{\partial x \partial y} \right) dxdy, \end{aligned} \tag{4.19}$$

where

$$F(y) = \frac{(y - y_K)^2 - \hbar_K^2}{2}, \quad E(x) = \frac{(x - x_K)^2 - h_K^2}{2}.$$

The proof is provided in the Appendix, for the readers' convenience.

Theorem 4.3. *Let $w = w_0 + w_1 + w_2$ satisfy the regularity* (2.2)–(2.4)*. Then there is a constant C, independent of N and ϵ, such that*

$$|\epsilon(\nabla(w - w^I), \nabla v)| \le C \left(\sqrt{\epsilon} \left(\frac{\ln N}{N}\right)^2 + \frac{1}{N^2} + \frac{\epsilon}{N^{1.5}} \right) \|v\|_\epsilon, \quad \forall v \in V_\epsilon^N.$$

Proof. (a) $K \subset \Omega_x \cup \Omega_{xy}$. Recall the regularity (2.2), apply the identity (4.18) to w_1, and we have

$$\begin{aligned} & \epsilon|\int_K \frac{\partial}{\partial x}(w_1 - w_1^I)\frac{\partial v}{\partial x}dxdy| \\ \leq \quad & C\int_K e^{-\alpha(1-x)/\epsilon}|F(y)|\left(|\frac{\partial v}{\partial x}| + \frac{2}{3}|y-y_K||\frac{\partial^2 v}{\partial x \partial y}|\right)dxdy. \end{aligned}$$

Using $|F(y)| \leq H^2/8$ and the inverse inequality (see (3.2))

$$\|(y-y_K)\frac{\partial^2 v}{\partial x \partial y}\|_K \leq \|\frac{\partial v}{\partial x}\|_K,$$

we then obtain

$$\epsilon|\int_K \frac{\partial}{\partial x}(w_1 - w_1^I)\frac{\partial v}{\partial x}dxdy| \leq CH^2\|e^{-\alpha(1-x)/\epsilon}\|_K\|\frac{\partial v}{\partial x}\|_K.$$

Summing over $K \subset \Omega_x \cup \Omega_{xy}$ and applying the Cauchy-Schwarz inequality, we get

$$\epsilon|\int_{\Omega_x \cup \Omega_{xy}} \frac{\partial}{\partial x}(w_1 - w_1^I)\frac{\partial v}{\partial x}dxdy| \leq \frac{C}{N^2}\|e^{-\alpha(1-x)/\epsilon}\|\|\frac{\partial v}{\partial x}\| \leq \frac{C}{\sqrt{2\alpha}N^2}\|v\|_\epsilon. \tag{4.20}$$

In order to estimate in the y-direction, we use the identity (4.19) and the regularity (2.2) to derive

$$\begin{aligned} & |\int_K \frac{\partial}{\partial y}(w_1 - w_1^I)\frac{\partial v}{\partial y}dxdy| \\ \leq \quad & C\epsilon^{-2}\int_K e^{-\alpha(1-x)/\epsilon}|E(x)|(|\frac{\partial v}{\partial y}| + \frac{2}{3}|x-x_K||\frac{\partial^2 v}{\partial x \partial y}|)dxdy \\ \leq \quad & \frac{C}{4}\epsilon^{-2}h^2\|e^{-\alpha(1-x)/\epsilon}\|_K\|\frac{\partial v}{\partial y}\|_K. \end{aligned}$$

Here we have used the fact that $|E(x)| \leq h^2/8$ and the inverse inequality

$$\|(x-x_K)\frac{\partial^2 v}{\partial x \partial y}\|_K \leq \|\frac{\partial v}{\partial y}\|_K.$$

Summing up all $K \subset \Omega_x \cup \Omega_{xy}$ and applying the Cauchy-Schwarz inequality, we have

$$\begin{aligned} & |\epsilon\int_{\Omega_x \cup \Omega_{xy}} \frac{\partial}{\partial y}(w_1 - w_1^I)\frac{\partial v}{\partial y}dxdy| \\ \leq \quad & C\epsilon^{-1}h^2\|e^{-\alpha(1-x)/\epsilon}\|\|\frac{\partial v}{\partial y}\| \leq C_1\epsilon\left(\frac{\ln N}{N}\right)^2\|v\|_\epsilon, \end{aligned} \tag{4.21}$$

which, combined with (4.20), proves

$$|\epsilon\int_{\Omega_x \cup \Omega_{xy}} |\nabla(w_1 - w_1^I)\nabla v dxdy| \leq C\left(\epsilon\left(\frac{\ln N}{N}\right)^2 + \frac{1}{N^2}\right)\|v\|_\epsilon.$$

(b) $K \subset \Omega_0 \cup \Omega_y$. From the regularity of w_1 we obtain

$$\|\frac{\partial w_1}{\partial x}\|^2_{\Omega_0 \cup \Omega_y} \leq C\epsilon^{-2}\|e^{-\alpha(1-x)/\epsilon}\|^2_{\Omega_0 \cup \Omega_y} \leq \frac{C}{\epsilon N^5}.$$

On the other hand, apply the inverse inequality (3.2) to w_0^I, recall estimates (4.11), (4.12), and (4.15) for $\|w_0^I\|_{\Omega_0\cup\Omega_y}$ in Theorem 4.2, and we have

$$\sum_{K\subset\Omega_0\cup\Omega_y}\|\frac{\partial w_1^I}{\partial x}\|_K^2 \le \frac{9}{H^2}\sum_{K\subset\Omega_0\cup\Omega_y}\|w_1^I\|_K^2 \le C\left(\frac{\epsilon}{N^3}+\frac{1}{N^4}\right).$$

Furthermore,

$$\begin{aligned}\|\frac{\partial}{\partial y}(w_1-w_1^I)\|_{\Omega_0\cup\Omega_y}^2 &\le C\sum_{K\subset\Omega_0\cup\Omega_y}\left(h_K^2\|\frac{\partial^2 w_1}{\partial x\partial y}\|_K^2+\hbar_K^2\|\frac{\partial^2 w_1}{\partial y^2}\|_K^2\right)\\ &\le C\sum_{K\subset\Omega_0\cup\Omega_y}H^2\epsilon^{-2}\|e^{-\alpha(1-x)/\epsilon}\|_K^2\\ &\le \frac{C}{N^2\epsilon^2}\|e^{-\alpha(1-x)/\epsilon}\|_{\Omega_0\cup\Omega_y}^2 \le \frac{C}{N^7\epsilon}.\end{aligned}$$

Altogether, we have (note that $\frac{2\sqrt{\epsilon}}{N^2}\le\frac{1}{N^{2.5}}+\frac{\epsilon}{N^{1.5}}$),

$$\begin{aligned}&\left|\epsilon\int_{\Omega_0\cup\Omega_y}\nabla(w_1-w_1^I)\nabla v dxdy\right|\\ \le\ &\epsilon\left(\|\frac{\partial w_1}{\partial x}\|_{\Omega_0\cup\Omega_y}+\|\frac{\partial w_1^I}{\partial x}\|_{\Omega_0\cup\Omega_y}\right)\|\frac{\partial v}{\partial x}\|+\epsilon\|\frac{\partial}{\partial y}(w_1-w_1^I)\|_{\Omega_0\cup\Omega_y}\|\frac{\partial v}{\partial y}\|\\ \le\ &C\left(\frac{1}{N^{2.5}}+\frac{\epsilon}{N^{1.5}}\right)\|v\|_\epsilon,\end{aligned}$$

which, combined with the estimate in (a), proves the assertion for w_1. The argument for w_2 is similar. Now we consider w_0.

(a′) When $K\subset\Omega_y\cup\Omega_{xy}$, apply the identity (4.18) to w_0, recall the regularity (2.4), and we have

$$\begin{aligned}&\epsilon|\int_K\frac{\partial}{\partial x}(w_0-w_0^I)\frac{\partial v}{\partial x}dxdy|\\ \le\ &C\epsilon^{-2}\int_K e^{-\alpha(1-x)/\epsilon}e^{-\alpha(1-y)/\epsilon}|F(y)|\left(|\frac{\partial v}{\partial x}|+\frac{2}{3}|y-y_K||\frac{\partial^2 v}{\partial x\partial y}|\right)dxdy\\ \le\ &\frac{C}{4}\epsilon^{-2}h^2\|e^{-\alpha(1-x)/\epsilon}e^{-\alpha(1-y)/\epsilon}\|_K\|\frac{\partial v}{\partial x}\|_K.\end{aligned}$$

We have used the inverse inequality and the fact $|F(y)|\le h^2/8$. Summing over $K\subset\Omega_y\cup\Omega_{xy}$ and applying the Cauchy-Schwarz inequality, we derive

$$\begin{aligned}&\epsilon|\int_{\Omega_y\cup\Omega_{xy}}\frac{\partial}{\partial x}(w_0-w_0^I)\frac{\partial v}{\partial x}dxdy|\\ \le\ &C\left(\frac{\ln N}{N}\right)^2\|e^{-\alpha(1-x)/\epsilon}e^{-\alpha(1-y)/\epsilon}\|\|\frac{\partial v}{\partial x}\|\\ \le\ &\frac{C}{2\alpha}\sqrt{\epsilon}\left(\frac{\ln N}{N}\right)^2\|v\|_\epsilon.\end{aligned}\tag{4.22}$$

(b′1) When $K\subset\Omega_x$, from the regularity of w_0 we get

$$\|\frac{\partial w_0}{\partial x}\|_{\Omega_x}\le C\epsilon^{-1}\|e^{-\alpha(1-x)/\epsilon}e^{-\alpha(1-y)/\epsilon}\|_{\Omega_x}\le\frac{C}{N^{2.5}}.$$

We notice that on an element K, $\left|\frac{\partial w_0^I}{\partial x}\right|$ is less than the maximum value of $\left|\frac{\partial w_0}{\partial x}\right|$ on K. Therefore, by (3.16) and (3.17), we have

$$\begin{aligned}\|\frac{\partial w_0^I}{\partial x}\|_{\Omega_x}^2 &\leq C\epsilon^{-2}\sum_{j=1}^{N}\sum_{i=N+1}^{2N} e^{-2\alpha(1-x_i)/\epsilon}e^{-2\alpha(1-y_j)/\epsilon}Hh \\ &\leq C\frac{\epsilon^{-1}}{N^5}(\epsilon+N^{-1}),\end{aligned}$$

or

$$\|\frac{\partial w_0^I}{\partial x}\|_{\Omega_x} \leq C\left(\frac{1}{N^{2.5}}+\frac{1}{\epsilon^{1/2}N^3}\right).$$

Therefore,

$$\|\frac{\partial}{\partial x}(w_0-w_0^I)\|_{\Omega_x} \leq \|\frac{\partial w_0}{\partial x}\|_{\Omega_x}+\|\frac{\partial w_0^I}{\partial x}\|_{\Omega_x} \leq C\left(\frac{1}{N^{2.5}}+\frac{1}{\epsilon^{1/2}N^3}\right).$$

(b′2) When $K\subset\Omega_0$, from the regularity of w_0 we get

$$\|\frac{\partial w_0}{\partial x}\|_{\Omega_0} \leq C\epsilon^{-1}\|e^{-\alpha(1-x)/\epsilon}e^{-\alpha(1-y)/\epsilon}\|_{\Omega_0} \leq \frac{C}{N^5}.$$

On the other hand, by the inverse inequality (3.2) and (3.17)

$$\begin{aligned}\|\frac{\partial w_0^I}{\partial x}\|_{\Omega_0} &\leq \frac{3}{H}\|w_0^I\|_{\Omega_0} \\ &\leq CN\left(\sum_{i,j=1}^{N} e^{-2\alpha(1-x_i)/\epsilon}e^{-2\alpha(1-y_j)/\epsilon}H^2\right)^{1/2} \leq \frac{C}{N^4}(\epsilon+N^{-1}).\end{aligned}$$

Altogether, we have

$$\|\frac{\partial}{\partial x}(w_0-w_0^I)\|_{\Omega_0\cup\Omega_x} \leq C\left(\frac{1}{N^{2.5}}+\frac{1}{\epsilon^{1/2}N^3}+\frac{\epsilon}{N^2}\right).$$

Hence,

$$\epsilon|\int_{\Omega_0\cup\Omega_x}\frac{\partial}{\partial x}(w_0-w_0^I)\frac{\partial v}{\partial x}dxdy| \leq C\left(\frac{\epsilon^{1/2}}{N^{2.5}}+\frac{1}{N^3}+\frac{\epsilon^{1.5}}{N^2}\right)\|v\|_\epsilon.$$

This, together with the estimate in (a′), proves

$$\epsilon|\int_{\Omega}\frac{\partial}{\partial x}(w_0-w_0^I)\frac{\partial v}{\partial x}dxdy| \leq C\left(\sqrt{\epsilon}\left(\frac{\ln N}{N}\right)^2+\frac{1}{N^3}\right)\|v\|_\epsilon.$$

The argument for the y-direction is the same. Hence, the assertion is established for w_0. □

Theorem 4.4. *Let $\bar{u}\in W_\infty^3(\Omega)$ be such that the norm $\|\bar{u}\|_{3,\infty}$ is bounded uniformly with respect to ϵ. Then there exists a constant C, independent of ϵ and N, such that*

$$|(\vec{\beta}\cdot\nabla(\bar{u}-\bar{u}^I),v)| \leq C\frac{\ln^{1/2}N}{N^2}\|v\|_\epsilon, \quad \forall v\in V_\epsilon^N. \tag{4.23}$$

Proof. Define $\Pi^N\vec{\beta}$, the discrete L_2-projection of $\vec{\beta}$, by

$$\vec{\beta}^K = \Pi^N\vec{\beta}|_K = \frac{1}{4h_K\hbar_K}\int_K \vec{\beta}dxdy.$$

We see that $\Pi^N\vec{\beta}$ is a piecewise constant vector function. It is a standard result that

$$\|\vec{\beta} - \Pi^N\vec{\beta}\|_\infty \le CH\|\vec{\beta}\|_{1,\infty}. \tag{4.24}$$

Now we decompose

$$\begin{aligned} & (\vec{\beta}\cdot\nabla(\bar{u}-\bar{u}^I), v) \\ = \quad & ((\vec{\beta}-\Pi^N\vec{\beta})\cdot\nabla(\bar{u}-\bar{u}^I), v) + (\Pi^N\vec{\beta}\cdot\nabla(\bar{u}-\bar{u}^I), v). \end{aligned} \tag{4.25}$$

For the first term on the right-hand side of (4.25), we have, from the standard approximation theory and (4.24),

$$|((\vec{\beta}-\Pi^N\vec{\beta})\cdot\nabla(\bar{u}-\bar{u}^I), v)| \le CH^2\|\vec{\beta}\|_{1,\infty}|\bar{u}|_2\|v\|. \tag{4.26}$$

For the second term on the right-hand side of (4.25), we write

$$\begin{aligned} (\Pi^N\vec{\beta}\cdot\nabla(\bar{u}-\bar{u}^I), v) \quad = \quad & \sum_K \beta_1^K \int_K \frac{\partial}{\partial x}(\bar{u}-\bar{u}^I)vdxdy \\ & + \sum_K \beta_2^K \int_K \frac{\partial}{\partial y}(\bar{u}-\bar{u}^I)vdxdy. \end{aligned} \tag{4.27}$$

We only estimate the first term on the right-hand side of (4.27), since the argument for the second term is similar. Toward this end, we need another integral identity from [9]:

$$\int_K \frac{\partial}{\partial x}(\bar{u}-\bar{u}^I)vdxdy = \int_K R(\bar{u},v)dxdy + \frac{h_K^2}{3}\left(\int_{l_2^K} - \int_{l_4^K}\right)\frac{\partial^2\bar{u}}{\partial x^2}vdy, \tag{4.28}$$

where

$$\begin{aligned} R(\bar{u},v) \quad = \quad & \frac{1}{3}E(x)(x-x_K)\frac{\partial^3\bar{u}}{\partial x^3}\frac{\partial v}{\partial x} - \frac{h_K^2}{3}\frac{\partial^3\bar{u}}{\partial x^3}v + F(y)\frac{\partial^3\bar{u}}{\partial x\partial y^2} \\ & \cdot\left[v - (x-x_K)\frac{\partial v}{\partial x} - \frac{2}{3}(y-y_K)\frac{\partial v}{\partial y} + \frac{2}{3}(x-x_K)(y-y_K)\frac{\partial^2 v}{\partial x\partial y}\right]. \end{aligned}$$

Again, the proof is provided in the Appendix, (0.10). Through the inverse inequalities (3.2), (3.3) and $|E(x)|, |F(y)| \le H^2/8$, we are able to estimate the integral on K and hence to obtain

$$\left|\sum_K \beta_1^K \int_K R(\bar{u},v)dxdy\right| \le CH^2\sum_K |\bar{u}|_{3,K}\|v\|_{0,K} \le CH^2|\bar{u}|_3\|v\|. \tag{4.29}$$

In order to estimate the integral on the vertical edges, we rewrite

$$\sum_K \beta_1^K h_K^2\left(\int_{l_2^K} - \int_{l_4^K}\right)\frac{\partial^2\bar{u}}{\partial x^2}vdy = \sum_{l\in\mathcal{E}_y^0}(h_{l_-}^2\beta_1^{l_-} - h_{l_+}^2\beta_1^{l_+})\int_l \frac{\partial^2\bar{u}}{\partial x^2}vdy,$$

where $\mathcal{E}_y^0$ is the set of all interior vertical element edges, and the index l_- (l_+) indicates function values or element sizes on the left (right) of l. We further express

$$h_{l_-}^2\beta_1^{l_-} - h_{l_+}^2\beta_1^{l_+} = \beta_1^{l_-}(h_{l_-}^2 - h_{l_+}^2) + h_{l_+}^2(\beta_1^{l_-} - \beta_1^{l_+}).$$

Recall that we are using the piecewise uniform mesh; therefore $h_{l_-}^2 - h_{l_+}^2 = H^2 - H^2$ (or $h^2 - h^2$) for most of the edges except on the transition line

$$L = \{(1-\tau, y) : \ 0 \le y \le 1\},$$

where $h_{l_-}^2 - h_{l_+}^2 = H^2 - h^2$. Hence,

$$\begin{aligned}
&\sum_K \beta_1^K h_K^2 \left(\int_{l_2^K} - \int_{l_4^K} \right) \frac{\partial^2 \bar{u}}{\partial x^2} v dy \\
= \ & \sum_{l \in L} \beta_1^{l_-} (H^2 - h^2) \int_l \frac{\partial^2 \bar{u}}{\partial x^2} v dy + \sum_{l \in \mathcal{E}_y^0} h_{l_+}^2 (\beta_1^{l_-} - \beta_1^{l_+}) \int_l \frac{\partial^2 \bar{u}}{\partial x^2} v dy \\
= \ & I + II. \qquad (4.30)
\end{aligned}$$

The estimate of II is straightforward:

$$\begin{aligned}
|II| \ &\le \ \sum_{l \in \mathcal{E}_y^0} h_{l_+}^2 C' H \|\beta_1\|_{1,\infty} \|\bar{u}\|_{2,l} \|v\|_{0,l} \\
&\le \ C \sum_{l \in \mathcal{E}_y^0} h_{l_+}^2 H h_{l_-}^{-1} \|\bar{u}\|_{3,K_l} \|v\|_{0,K_l} \le C H^2 \|\bar{u}\|_3 \|v\|. \qquad (4.31)
\end{aligned}$$

Here we have used the imbedding inequalities

$$\|\bar{u}\|_{2,l} \le \frac{C}{\sqrt{h_{l_-}}} \|\bar{u}\|_{3,K_l}, \quad \|v\|_{0,l} \le \frac{3}{\sqrt{h_{l_-}}} \|v\|_{0,K_l}.$$

Note that $H \ge h_{l_-} \ge h_{l_+} \ge h$. For I we have

$$\begin{aligned}
|I| \ &\le \ \|\beta_1\|_\infty H^2 \sum_{l \in L} \left| \int_l \frac{\partial^2 \bar{u}}{\partial x^2} v dy \right| \\
&= \ \|\beta_1\|_\infty H^2 \sum_{j=1}^{2N} \left| \int_{y_{j-1}}^{y_j} \left(\frac{\partial^2 \bar{u}}{\partial x^2} v \right) (1-\tau, y) dy \right| \\
&= \ \|\beta_1\|_\infty H^2 \sum_{j=1}^{2N} \left| \int_{y_{j-1}}^{y_j} \sum_{i=N+1}^{2N} \int_{x_{i-1}}^{x_i} \frac{\partial}{\partial x} \left(\frac{\partial^2 \bar{u}}{\partial x^2} v \right) dx dy \right| \\
&\le \ \frac{C}{N^2} \sum_{j=1}^{2N} \sum_{i=N+1}^{2N} \int_{\Omega_{ij}} \left| \frac{\partial^3 \bar{u}}{\partial x^3} v + \frac{\partial^2 \bar{u}}{\partial x^2} \frac{\partial v}{\partial x} \right| dx dy \\
&\le \ \frac{C \|\bar{u}\|_{3,\infty}}{N^2} \int_{\Omega_x \cup \Omega_{xy}} \left| v + \frac{\partial v}{\partial x} \right| dx dy \\
&\le \ \frac{C \|\bar{u}\|_{3,\infty}}{N^2} \left(\int_{\Omega_x \cup \Omega_{xy}} \left| v + \frac{\partial v}{\partial x} \right|^2 dx dy \right)^{1/2} \left(\int_{\Omega_x \cup \Omega_{xy}} dx dy \right)^{1/2} \\
&\le \ \frac{C \|\bar{u}\|_{3,\infty}}{N^2} \|v\|_1 \tau^{1/2} \le \bar{C} \frac{\ln^{1/2} N}{N^2} \|v\|_\epsilon. \qquad (4.32)
\end{aligned}$$

Substituting the estimates for I and II into (4.32), we obtain

$$\left| \sum_K \beta_1^K h_K^2 \left(\int_{l_2^K} - \int_{l_4^K} \right) \frac{\partial^2 \bar{u}}{\partial x^2} v dy \right| \le C \frac{\sqrt{\ln N}}{N^2} \|\bar{u}\|_{3,\infty} \|v\|_\epsilon.$$

This, combined with (4.29), finishes the estimate for the first term on the right-hand side of (4.27). The estimate of the second term on the right-hand side of (4.27) is similar. Hence, the proof of the theorem is completed. □

5. Main results

Before introducing main theorems, we rewrite the bilinear form for $R \in H_0^1(\Omega)$:

$$\begin{aligned} B_\epsilon(R,v) &= \epsilon(\nabla R, \nabla v) + (\vec{\beta}\cdot\nabla R, v) + (cR, v) \\ &= \epsilon(\nabla R, \nabla v) - (R, \vec{\beta}\cdot\nabla v) + (R, (c - \nabla\cdot\vec{\beta})v). \end{aligned} \tag{5.1}$$

We shall use whichever of these two expressions is more convenient.

Again, all results in this section are valid for $\epsilon \in (0,1]$ and $N \geq 2$, as mentioned in Section 4. We shall not repeat this statement in each theorem.

Theorem 5.1. *Let u be the solution of (1.1)–(1.2) that satisfies the regularity (2.1)–(2.4), and let $u^I \in V_\epsilon^N$ be the bilinear interpolation of u on the Shishkin mesh. Then there is a constant C, independent of ϵ and N, such that*

$$|B_\epsilon(u - u^I, v)| \leq C\left(\left(\frac{\ln N}{N}\right)^2 + \frac{1}{N}\right)\|v\|_\epsilon, \quad \forall v \in V_\epsilon^N; \tag{5.2}$$

in addition, if $|\bar{u}|_{3,\infty}$ is bounded by a constant independent of ϵ, then

$$|B_\epsilon(u - u^I, v)| \leq C\left(\left(\frac{\ln N}{N}\right)^2 + \frac{\epsilon}{N^{1.5}}\right)\|v\|_\epsilon. \tag{5.3}$$

Proof. In light of Theorems 4.3 and 4.2, for any $v \in V_\epsilon^N$ we have

$$\begin{aligned} |\epsilon(\nabla(w - w^I), \nabla v)| &\leq C\left(\sqrt{\epsilon}\left(\frac{\ln N}{N}\right)^2 + \frac{1}{N^2} + \frac{\epsilon}{N^{1.5}}\right)\|v\|_\epsilon, \\ |(w - w^I, (c - \nabla\cdot\vec{\beta})v)| &\leq \|w - w^I\|\|(c - \nabla\cdot\vec{\beta})v\| \\ &\leq C\left(\sqrt{\epsilon}\left(\frac{\ln N}{N}\right)^2 + \frac{1}{N^3}\right)\|v\|, \\ |(w - w^I, \vec{\beta}\cdot\nabla v)_{\Omega\setminus S}| &\leq \|w - w^I\|_{\Omega\setminus S}\|\vec{\beta}\cdot\nabla v\| \\ &\leq C\sqrt{\epsilon}\left(\frac{\ln N}{N}\right)^2 |v|_1 \leq C\left(\frac{\ln N}{N}\right)^2\|v\|_\epsilon, \\ |(w - w^I, \vec{\beta}\cdot\nabla v)_S| &\leq 2\|w\|_{S,\infty}\sum_{K\subset S}\int_K |\beta\cdot\nabla v| \\ &\leq \frac{C}{N^{2.5}}\sum_{K\subset S}\|v\|_K \leq \frac{C_1}{N^{2.5}}\|v\|_S N^{1/2} \leq \frac{C_1}{N^2}\|v\|. \end{aligned}$$

Here, we have used the inverse inequality for $K \subset S$:

$$\int_K |\beta\cdot\nabla v| \leq C\left(\int_K |\nabla v|^2\right)^{1/2}|K|^{1/2} \leq CN\|v\|_K N^{-1} = C\|v\|_K.$$

Setting $R = w - w^I$ in (5.1), we have

$$|B_\epsilon(w - w^I, v)| \leq C\left(\left(\frac{\ln N}{N}\right)^2 + \frac{\epsilon}{N^{1.5}}\right)\|v\|_\epsilon, \quad \forall v \in V_\epsilon^N. \tag{5.4}$$

For $\bar{u}$, if the stronger regularity condition $|\bar{u}|_{3,\infty} \le C$ holds, we use (4.18), (4.19), and the inverse inequality (3.2) to derive

$$|\epsilon(\nabla(\bar{u}-\bar{u}^I),\nabla v)| \le 3\epsilon \sum_K \left(h_K^2 \|\frac{\partial^3 \bar{u}}{\partial x^2 \partial y}\| + \hbar_K^2 \|\frac{\partial^3 \bar{u}}{\partial x \partial y^2}\| \right) \|\nabla v\| \le C\frac{\epsilon}{N^2}|v|_1.$$

By Theorem 4.4, we have

$$|(\vec{\beta}\cdot\nabla(\bar{u}-\bar{u}^I),v)| \le \frac{C\ln^{1/2} N}{N^2}\|v\|_\epsilon.$$

Furthermore, standard approximation theory gives us

$$|(\bar{u}-\bar{u}^I, cv)| \le \frac{C}{N^2}|\bar{u}|_2\|v\|.$$

Hence, we have

$$|B_\epsilon(\bar{u}-\bar{u}^I,v)| \le \frac{C}{N^2}(\epsilon|v|_1+\|v\|) + \frac{C\ln^{1/2} N}{N^2}\|v\|_\epsilon \le \frac{C_1\ln^{1/2} N}{N^2}\|v\|_\epsilon. \tag{5.5}$$

The estimate (5.3) follows from (5.4)–(5.5). If $\bar{u}$ satisfies only (2.1), then

$$|(\vec{\beta}\cdot\nabla(\bar{u}-\bar{u}^I),v)| \le \frac{C}{N}\|\bar{u}\|_{2,\Omega}\|v\|,$$

and we obtain (5.2). □

Theorem 5.2. *Let u be the solution of* (1.1)–(1.2) *that satisfies the regularity* (2.1)–(2.4)*, and let $u^I \in V_\epsilon^N$ be the bilinear interpolation of u on the Shishkin mesh. Then there is a constant C, independent of ϵ and N, such that*

$$\|u-u^I\|_{\epsilon,N} \le C\left(\left(\frac{\ln N}{N}\right)^2 + \frac{\sqrt{\epsilon}}{N}\right); \tag{5.6}$$

in addition, if $|\bar{u}|_{3,\infty}$ has a bound independent of ϵ, then

$$\|u-u^I\|_{\epsilon,N} \le C\left(\frac{\ln N}{N}\right)^2. \tag{5.7}$$

Proof. From Theorems 4.1 and 4.2, we have

$$\|w-w^I\|_{\epsilon,N} \le C\left(\frac{\ln N}{N}\right)^2.$$

Applying (3.9) to $\bar{u}$ when $|\bar{u}|_{3,\infty} \le C$ yields

$$\begin{aligned}\left|\frac{\partial}{\partial x}(\bar{u}-\bar{u}^I)(x_K,y_K)\right| &\le \frac{C}{2h_K}\int_{-h_K}^{h_K}(t^2/2+|t|\hbar_K+\hbar_K^2/2)dt \\ &= C(h_K^2/6+h_K\hbar_K/2+\hbar_K^2/2).\end{aligned}$$

Similarly,

$$\left|\frac{\partial}{\partial y}(\bar{u}-\bar{u}^I)(x_K,y_K)\right| \le C(h_K^2/2+h_K\hbar_K/2+\hbar_K^2/6).$$

Therefore,

$$|\bar{u}-\bar{u}^I|_{\epsilon,N} \le C\frac{\sqrt{\epsilon}}{N^2}.$$

Furthermore, the standard approximation gives

$$\|\bar{u}-\bar{u}^I\| \le \frac{C}{N^2}.$$

The estimate (5.7) is then established by summing up the analysis for w and $\bar{u}$. When $\bar{u}$ only satisfies (2.1), (5.6) is obtained. □

Remark 5.1. Theorem 5.2 states that the interpolation u^I is superconvergent to u in the discrete ϵ-weighted energy norm if $\bar{u}$ satisfies a stronger regularity condition. This fact will be combined with Theorem 5.1 to establish the main result of this paper, which is stated in the following theorem.

Theorem 5.3. *Let $u^N \in V_\epsilon^N$ be the finite element approximation of the solution u of* (1.1)–(1.2) *that satisfies the regularity* (2.1)–(2.4)*. Then there is a constant C, independent of ϵ and N, such that*

$$\|u - u^N\| \le \|u - u^N\|_{\epsilon,N} \le C\left(\left(\frac{\ln N}{N}\right)^2 + \frac{1}{N}\right); \tag{5.8}$$

in addition, if $|\bar{u}|_{3,\infty}$ has a bound independent of ϵ, then

$$\|u - u^N\| \le \|u - u^N\|_{\epsilon,N} \le C\left(\left(\frac{\ln N}{N}\right)^2 + \frac{\epsilon}{N^{1.5}}\right). \tag{5.9}$$

Proof. When $\bar{u}$ satisfies the stronger regularity assumption $|\bar{u}|_{3,\infty} \le C$, we have, by recalling the coercivity (2.5) and Theorem 5.1,

$$\begin{aligned} & C_1\|u^N - u^I\|_\epsilon^2 \le B_\epsilon(u^N - u^I, u^N - u^I) \\ = \quad & B_\epsilon(u - u^I, u^N - u^I) \le C\left(\left(\frac{\ln N}{N}\right)^2 + \frac{\epsilon}{N^{1.5}}\right)\|u^N - u^I\|_\epsilon. \end{aligned}$$

Canceling $\|u^N - u^I\|_\epsilon$ on both sides yields

$$\|u^N - u^I\|_\epsilon \le C\left(\left(\frac{\ln N}{N}\right)^2 + \frac{\epsilon}{N^{1.5}}\right).$$

Finally, applying the triangle inequality, Theorem 5.2, and the stability inequality (3.4), we derive

$$\begin{aligned} \|u - u^N\|_{\epsilon,N} &\le \|u - u^I\|_{\epsilon,N} + \|u^I - u^N\|_{\epsilon,N} \\ &\le C\left(\frac{\ln N}{N}\right)^2 + \|u^I - u^N\|_\epsilon \le C\left(\left(\frac{\ln N}{N}\right)^2 + \frac{\epsilon}{N^{1.5}}\right). \end{aligned}$$

The error bound will include N^{-1} when $\bar{u}$ satisfies only (2.1). □

Remark 5.2. Under the stronger regularity assumption, the error bound

$$\|u - u^N\|_{\epsilon,N} \le C\left(\left(\frac{\ln N}{N}\right)^2 + \frac{\epsilon}{N^{1.5}}\right)$$

is a superconvergent result. Note that the optimal error bound for the bilinear interpolation u^I is

$$\|u - u^I\|_\epsilon \le C\frac{\ln N}{N}.$$

In the proof, we have also obtained

$$\|u^I - u^N\|_\epsilon \le C\left(\left(\frac{\ln N}{N}\right)^2 + \frac{\epsilon}{N^{1.5}}\right),$$

which means that the finite element solution and the bilinear interpolation are "superclose" in the ϵ-weighted energy norm. This is the same as in problems without boundary layers.

Theorem 5.4. *Let $u^N \in V_\epsilon^N$ be the finite element approximation of the solution u of (1.1)–(1.2) that satisfies the regularity (2.1)–(2.4). Then for the mesh point $(x_m, y_n) \in \bar{\Omega}_x \cup \bar{\Omega}_y$, we have*

$$|(u - u^N)(x_m, y_n)| \le C \left(\frac{\ln^{5/2} N}{N^{3/2}} + \frac{\ln^{1/2} N}{N^{1/2}} \right); \tag{5.10}$$

if, in addition, $|\bar{u}|_{3,\infty}$ has a bound independent of ϵ, then

$$|(u - u^N)(x_m, y_n)| \le C \left(\frac{\ln^{5/2} N}{N^{3/2}} + \frac{\epsilon \ln^{1/2} N}{N} \right), \tag{5.11}$$

where C is a constant independent of ϵ and N.

Proof. Define the Green's function G by

$$B_\epsilon(v, G) = v(x_m, y_n) \quad \forall v \in V_\epsilon^N.$$

Then we have

$$(u - u^N)(x_m, y_n) = (u^I - u^N)(x_m, y_n) = B_\epsilon(u^I - u^N, G) = B_\epsilon(u^I - u, G).$$

When $|\bar{u}|_{3,\infty} \le C$, by Theorem 5.1, we derive

$$|(u - u^N)(x_m, y_n)| \le C \left(\left(\frac{\ln N}{N^2} \right)^2 + \frac{\epsilon}{N^{1.5}} \right) \|G\|_\epsilon \le C \left(\frac{\ln^{5/2} N}{N^{3/2}} + \frac{\epsilon \ln^{1/2} N}{N} \right).$$

Here we have used the inequality

$$\|G\|_\epsilon \le C N^{1/2} \ln^{1/2} N,$$

which is proved by Stynes and O'Riordan [21] under the conditions $x_m \ge 1 - \tau$ and $y_n \le 1 - \tau$ (or $x_m \le 1 - \tau$ and $y_n \ge 1 - \tau$).

When $\bar{u}$ satisfies only (2.1), the second term changes to $N^{-1/2} \ln^{1/2} N$. □

Remark 5.3. When $\epsilon^2 < 1/N$, which is not a real restriction in practice, the error bounds $N^{-2} \ln^2 N$ in (5.9) and $N^{-3/2} \ln^{5/2} N$ in (5.11) will be the dominant terms. Numerical tests show that the first error bound is optimal (in the sense that the logarithmic term is not removable), while the second error bound is off by $N^{1/2}$.

6. Numerical results

The purpose of this section is to demonstrate that the error estimate for approximating the boundary layer terms is sharp. In order to do so, we design a special case which isolates the boundary layer behavior. Specifically, we choose $\vec{\beta}(x, y) = (1, 1)$, $c(x, y) = 0$, and

$$f(x, y) = (x + y)(1 - e^{-(1-x)/\epsilon} e^{-(1-y)/\epsilon}) + (x - y)(e^{-(1-y)/\epsilon} - e^{-(1-x)/\epsilon}).$$

The exact solution is

$$u(x, y) = xy(1 - e^{-(1-x)/\epsilon})(1 - e^{-(1-y)/\epsilon}),$$

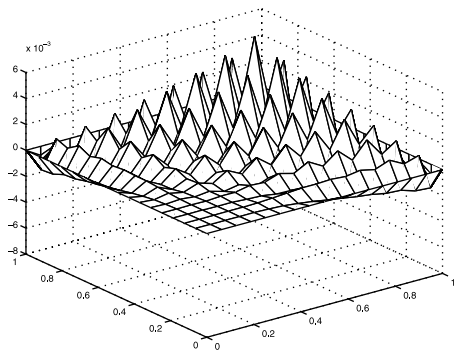

FIGURE 3. Error distribution of the Shishkin mesh, $\epsilon = .001$, $N = 16$, $\kappa = 2$

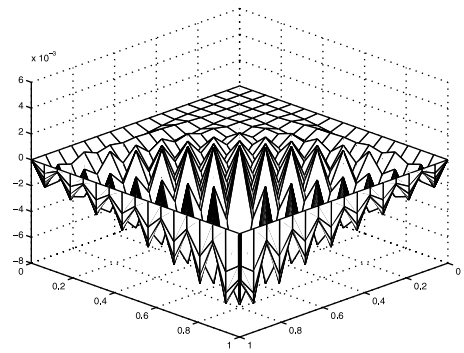

FIGURE 4. Error distribution of the Shishkin mesh, $\epsilon = .001$, $N = 16$, $\kappa = 2$

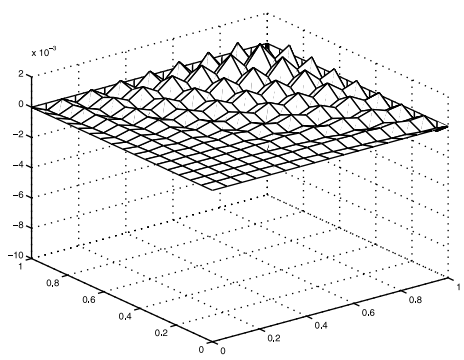

FIGURE 5. Error distribution of the Shishkin mesh, $\epsilon = .001$, $N = 16$, $\kappa = 2.5$

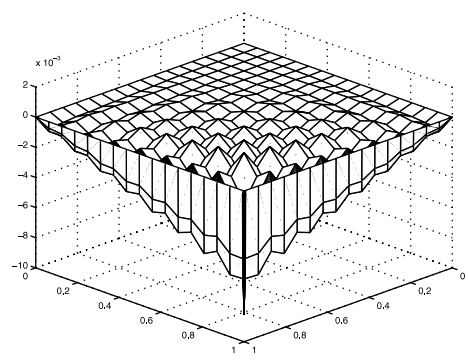

FIGURE 6. Error distribution of the Shishkin mesh, $\epsilon = .001$, $N = 16$, $\kappa = 2.5$

which has a decomposition $u = \bar{u} + w_0 + w_1 + w_2$ with

$$\bar{u}(x,y) = xy \in V_\epsilon^N, \quad w_0(x,y) = xye^{-(1-x)/\epsilon}e^{-(1-y)/\epsilon},$$
$$w_1(x,y) = -xye^{-(1-x)/\epsilon}, \quad w_2(x,y) = -xye^{-(1-y)/\epsilon}.$$

By Theorem 5.3, the error in the discrete ϵ-weighted energy norm is of order $N^{-2}\ln^2 N$. In all numerical testing cases, errors are calculated in the discrete maximum norm

$$|u - u^N|_{\infty,N} = \max_{1\le i,j\le 2N-1} |(u - u^N)(x_i, y_j)|$$

and in the discrete ϵ-weighted semi-energy norm $|u - u^N|_{\epsilon,N}$, which is the dominant term in the discrete ϵ-weighted energy norm $\|u - u^N\|_{\epsilon,N}$. The computation was performed by Matlab 5 on a DEC AlphaStation 200 4/166. Tables 1–3 list the errors for $\epsilon = .01$, .001, .0001 and N= 3, 4, 6, 8, 12, 16, 24, 32, 48, 64, for the cases $\kappa = 1.5$, 2, 2.5. These data are plotted on log-log chart in Figures 7–12, where

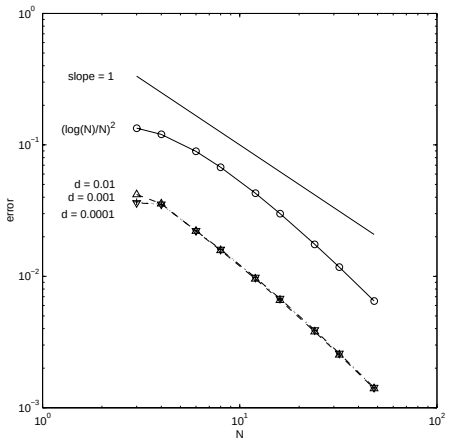

FIGURE 7. Error: discrete ϵ-weighted semi-energy norm, $\kappa = 2$

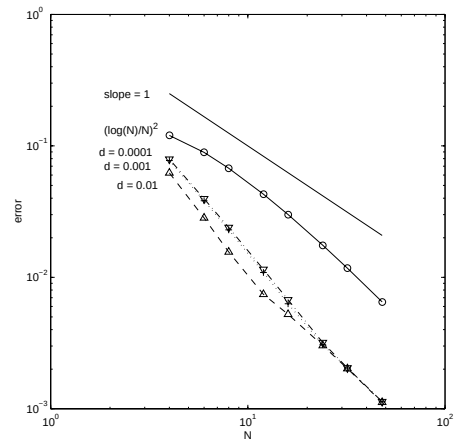

FIGURE 8. Error: discrete max norm, $\kappa = 2$

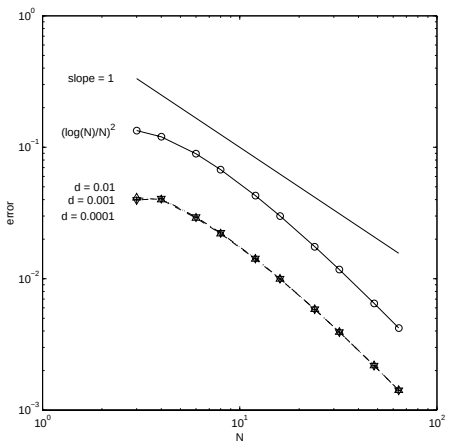

FIGURE 9. Error: discrete ϵ-weighted semi-energy norm, $\kappa = 2.5$

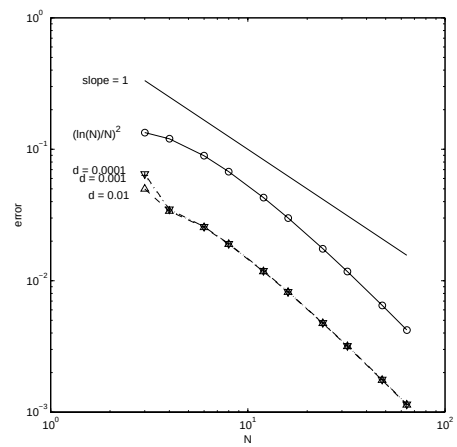

FIGURE 10. Error: discrete max norm, $\kappa = 2.5$

d represents ϵ. In all cases, an $O(N^{-2}\ln^2 N)$ convergent rate is clearly shown for $|u - u^N|_{\epsilon,N}$. This confirms that the theoretical error bound (5.9) is sharp.

In the cases $\kappa = 2$, 2.5, convergence is insensitive to ϵ in the way that the error curves in the discrete ϵ-weighted semi-energy norm are almost identical for different d. In the case $\kappa = 1.5$ we can see a slight dependence of the curves on d, and this dependence is more significant in the discrete maximum norm (see Figure 12). We see that convergent rates in the discrete maximum norm are almost the same as in the discrete ϵ-weighted semi-energy norm. In this aspect, our theoretical estimates in Theorem 5.4 are not optimal; in particular, the error bound (5.11) is off by $N^{1/2}$.

As far as the discrete ϵ-weighted semi-energy norm and the discrete maximum norm are concerned, $\kappa = 2$ is slightly better than $\kappa = 2.5$. We see that $N = 48$ for

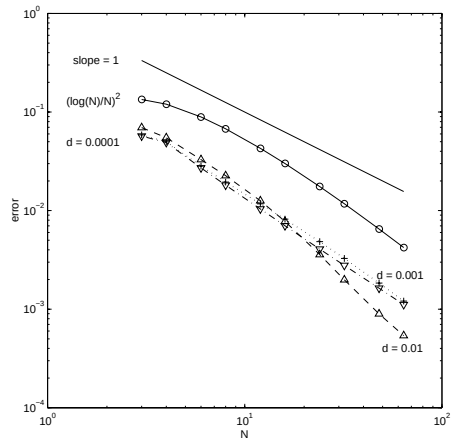

FIGURE 11. Error: discrete ϵ-weighted semi-energy norm, $\kappa = 1.5$

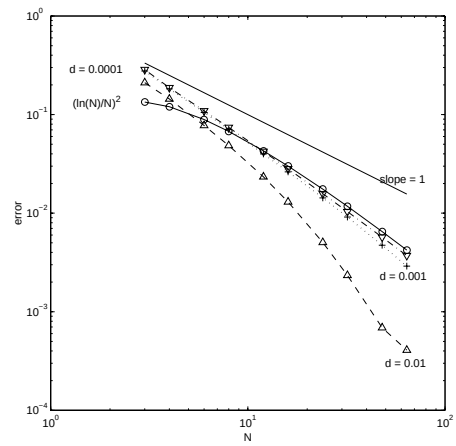

FIGURE 12. Error: the discrete max norm, $\kappa = 1.5$

$\kappa = 2$ is comparable with $N = 64$ for $\kappa = 2.5$. However, their error distributions are different. The errors $(u - u^N)(x_i, y_j)$ at the grid points are plotted in Figures 3–6 with $\epsilon = .001$ and $N = 16$ for $\kappa = 2$, $\kappa = 2.5$, respectively. Figures 3 and 5 are viewed in the flow direction, while Figures 4 and 6 are viewed against the flow direction. We see that for $\kappa = 2$, the error is "balanced" while for $\kappa = 2.5$ the error is more or less "one-sided" in the sense $u - u^N$ is usually less than zero.

Remark 6.1. We have tested different values of $\vec{\beta}(x, y)$ and $c(x, y)$. They behave similarly to the special choice $\vec{\beta}(x, y) = (1, 1)$ and $c(x, y) = 0$ as long as $\beta_1 \neq 0$ and $\beta_2 \neq 0$. Numerical experiments will behave in a similar way for variable coefficients when there is no internal layer formed.

TABLE 1. Error in the discrete norms, $\kappa = 1.5$

	$\epsilon = 10^{-2}$		$\epsilon = 10^{-3}$		$\epsilon = 10^{-4}$	
N	$\lvert u - u^N \rvert_{\epsilon,N}$	$\lvert u - u^N \rvert_{\infty,N}$	$\lvert u - u^N \rvert_{\epsilon,N}$	$\lvert u - u^N \rvert_{\infty,N}$	$\lvert u - u^N \rvert_{\epsilon,N}$	$\lvert u - u^N \rvert_{\infty,N}$
3	.069544	.211103	.058631	.277140	.057017	.285969
4	.054962	.143948	.049951	.182544	.049092	.187561
6	.032918	.077483	.028302	.105042	.027127	.109253
8	.022644	.048558	.019461	.070840	.018132	.074072
12	.012576	.023374	.011722	.039897	.010387	.042289
16	.007769	.013011	.008193	.026247	.007022	.028198
24	.003576	.005048	.004847	.014280	.004069	.015761
32	.001984	.002339	.003275	.009130	.002780	.010366
48	.000896	.000688	.001841	.004734	.001633	.005699
64	.000539	.000408	.001208	.002904	.001113	.003709

TABLE 2. Error in the discrete norms, $\kappa = 2$

	$\epsilon = 10^{-2}$		$\epsilon = 10^{-3}$		$\epsilon = 10^{-4}$	
N	$\lvert u-u^N\rvert_{\epsilon,N}$	$\lvert u-u^N\rvert_{\infty,N}$	$\lvert u-u^N\rvert_{\epsilon,N}$	$\lvert u-u^N\rvert_{\infty,N}$	$\lvert u-u^N\rvert_{\epsilon,N}$	$\lvert u-u^N\rvert_{\infty,N}$
3	.041926	.103412	.036897	.132076	.036193	.135697
4	.035659	.062306	.035387	.077390	.035291	.079156
6	.022102	.028332	.022249	.038271	.022211	.039622
8	.015747	.015601	.016005	.022974	.016004	.023912
12	.009561	.007428	.009767	.010876	.009808	.011487
16	.006579	.005227	.006721	.006288	.006773	.006742
24	.003791	.003023	.003860	.003068	.003903	.003188
32	.002527	.002019	.002566	.002039	.002591	.002042
48	.001400	.001120	.001416	.001131	.001423	.001132
64	.000910	.000727	.000917	.000733	.000919	.000734

TABLE 3. Error in the discrete norms, $\kappa = 2.5$

	$\epsilon = 10^{-2}$		$\epsilon = 10^{-3}$		$\epsilon = 10^{-4}$	
N	$\lvert u-u^N\rvert_{\epsilon,N}$	$\lvert u-u^N\rvert_{\infty,N}$	$\lvert u-u^N\rvert_{\epsilon,N}$	$\lvert u-u^N\rvert_{\infty,N}$	$\lvert u-u^N\rvert_{\epsilon,N}$	$\lvert u-u^N\rvert_{\infty,N}$
3	.041284	.049963	.039916	.063262	.039749	.064889
4	.039952	.033921	.040671	.034539	.040743	.034975
6	.028965	.025464	.029407	.025703	.029470	.025745
8	.022022	.018959	.022273	.019080	.022329	.019095
12	.014126	.011754	.014197	.011889	.014240	.011903
16	.009959	.008182	.009975	.008236	.010007	.008242
24	.005855	.004745	.005849	.004779	.005864	.004783
32	.003929	.003168	.003922	.003193	.003929	.003195
48	.002185	.001753	.002180	.001769	.002182	.001771
64	.001420	.001136	.001417	.001147	.001417	.001148

APPENDIX

Proof of (4.18) *and* (4.19) (see Figure 2). In order to simplify the notation, we use indices like $u_x, u_{xy}, \cdots$ to represent the partial derivatives and omit the $dxdy$ from the integration. We express

$$\begin{aligned} &\int_K (w-w^I)_x v_x \\ (0.1) \qquad &= [v_x - (y-y_K)v_{xy}] \int_K (w-w^I)_x + v_{xy} \int_K (w-w^I)_x (y-y_K). \end{aligned}$$

Note that v_{xy} and

$$v_x(x,y) - (y-y_K)v_{xy} = v_x(x_K, y_K)$$

are constants.

(a) For the first term on the right-hand side of (0.1), we have, by inserting $F''(y) = 1$,

$$\begin{aligned} \int_K (w-w^I)_x &= \int_K F''(y)(w-w^I)_x \\ &= \left(\int_{l_1^K} - \int_{l_3^K}\right) F'(y)(w-w^I)_x dx - \int_K F'(y)(w-w^I)_{xy}. \end{aligned}$$

Observe that $F'(y_K+\hbar_K)=\hbar_K$ is a constant on l_1^K, and we have

$$\int_{l_1^K} F'(y)(w-w^I)_x dx = \hbar_K (w-w^I)(x, y_K+\hbar_K)|_{x_K-h_K}^{x_K+h_K} = 0, \tag{0.2}$$

since w^I is the bilinear interpolation of w. Similarly,

$$\int_{l_3^K} F'(y)(w-w^I)_x dx = 0.$$

Therefore,

$$\begin{aligned}
\int_K (w-w^I)_x &= -\int_K F'(y)(w-w^I)_{xy} \\
&= -\left(\int_{l_1^K} - \int_{l_3^K}\right) F(y)(w-w^I)_{xy} + \int_K F(y)(w-w^I)_{xyy} \\
&= \int_K F(y) w_{xyy}, \qquad (0.3)
\end{aligned}$$

since $F(y)=0$ on $l_1^K \cup l_3^K$ and $w^I_{xyy}=0$ in K.

(b) For the second term on the right-hand side of (0.1), we have, by inserting $y-y_K=(F^2(y))'''/6$,

$$\begin{aligned}
&\int_K (w-w^I)_x (y-y_K) = \frac{1}{6}\int_K (F^2(y))'''(w-w^I)_x \\
= \ & \frac{1}{6}\left(\int_{l_1^K} - \int_{l_3^K}\right)(F^2(y))''(w-w^I)_x dx - \frac{1}{6}\int_K (F^2(y))''(w-w^I)_{xy}.
\end{aligned}$$

Since

$$(F^2(y))'' = 2F'(y)^2 + 2F(y)F''(y) = 2\hbar_K^2$$

is a constant on $l_1^K \cup l_3^K$, following the same argument as in (0.2), we derive

$$\left(\int_{l_1^K} - \int_{l_3^K}\right)(F^2(y))''(w-w^I)_x dx = 0.$$

Hence,

$$\begin{aligned}
&\int_K (w-w^I)_x (y-y_K) = -\frac{1}{6}\int_K (F^2(y))''(w-w^I)_{xy} \\
= \ & -\frac{1}{6}\left(\int_{l_1^K} - \int_{l_3^K}\right)(F^2(y))'(w-w^I)_{xy} dx + \frac{1}{6}\int_K (F^2(y))'(w-w^I)_{xyy} \\
= \ & \frac{1}{3}\int_K F(y)(y-y_K) w_{xyy}. \qquad (0.4)
\end{aligned}$$

Note that $(F^2(y))'=0$ on $l_1^K \cup l_3^K$.

Substituting (0.3) and (0.4) into (0.1) yields

$$\begin{aligned}
\int_K (w-w^I)_x v_x &= \int_K w_{xyy} F(y)[v_x - (y-y_K)v_{xy} + \frac{1}{3}(y-y_K)v_{xy}] \\
&= \int_K w_{xyy} F(y)[v_x - \frac{2}{3}(y-y_K)v_{xy}].
\end{aligned}$$

This finishes the proof of (4.18). The proof of (4.19) is similar. □

Proof of (4.28). Using the Taylor expansion of v on K, we express

$$\begin{aligned}\int_K (w-w^I)_x v &= \int_K (w-w^I)_x[v(x_K,y_K)+(x-x_K)v(x_K,y_K)\\ &\quad +(y-y_K)v_y(x_K,y_K)+(x-x_K)(y-y_K)v_{xy}].\end{aligned} \tag{0.5}$$

Using $x-x_K=E'(x)$, we derive

$$\begin{aligned}&\int_K (w-w^I)_x(x-x_K)=\int_K (w-w^I)_x E'(x)\\ &= \left(\int_{l_2^K}-\int_{l_4^K}\right)(w-w^I)_x E(x)dy-\int_K (w-w^I)_{xx}E(x)\\ &= -\int_K w_{xx}E(x),\end{aligned} \tag{0.6}$$

since $E(x)=0$ on $l_2^K\cup l_4^K$ and $w_{xx}^I=0$ in K. In addition, using $y-y_K=F'(y)$, we have

$$\begin{aligned}&\int_K (w-w^I)_x(x-x_K)(y-y_K)=\int_K (w-w^I)_x E'(x)F'(y)\\ &= \left(\int_{l_2^K}-\int_{l_4^K}\right)(w-w^I)_x E(x)F'(y)dy-\int_K (w-w^I)_{xx}E(x)F'(y)\\ &= -\left(\int_{l_1^K}-\int_{l_3^K}\right)w_{xx}E(x)F(y)dx+\int_K w_{xxy}E(x)F(y),\end{aligned} \tag{0.7}$$

since $F(y)=0$ on $l_1^K\cup l_3^K$.

Applying (0.3), (0.6), (0.4), and (0.7) to the terms on the right-hand side of (0.5), respectively, we have

$$\begin{aligned}&\int_K (w-w^I)_x v=\int_K F(y)w_{xyy}v(x_K,y_K)-\int_K E(x)w_{xx}v_x(x_K,y_K)\\ &+\frac{1}{3}\int_K F(y)(y-y_K)w_{xyy}v_y(x_K,y_K)+\int_K E(x)F(y)w_{xxy}v_{xy}.\end{aligned} \tag{0.8}$$

Further, for the second term on the right-hand side of (0.8), we use the identity

$$E(x)=\frac{1}{6}E^2(x)''-\frac{1}{3}h_K^2$$

to derive

$$\begin{aligned}&\int_K E(x)w_{xx}v_x(x_K,y_K)=\int_K E(x)w_{xx}[v_x-(y-y_K)v_{xy}]\\ &= \int_K [\frac{1}{6}E^2(x)''-\frac{1}{3}h_K^2]w_{xx}v_x-\int_K E(x)F'(y)w_{xx}v_{xy}\\ &= -\frac{1}{6}\int_K E^2(x)'w_{xxx}v_x-\frac{h_K^2}{3}\left(\int_{l_2^K}-\int_{l_4^K}\right)w_{xx}vdy+\frac{h_K^2}{3}\int_K w_{xxx}v\\ &\quad +\int_K E(x)F(y)w_{xxy}v_{xy}.\end{aligned} \tag{0.9}$$

Finally, substituting

$$v(x_K, y_K) = v(x,y) - (x - x_K)v(x,y) - (y - y_K)v_y(x,y) + (x - x_K)(y - y_K)v_{xy},$$
$$v_y(x_K, y_K) = v_y(x,y) - (x - x_K)v_{xy},$$

and (0.9) into (0.8), we derive

$$\begin{aligned} & \int_K (w - w^I)_x v \\ = \quad & \int_K \Big(F(y) w_{xyy} [v - (x - x_K)v_x - \frac{2}{3}(y - y_K)v_y + \frac{2}{3}(x - x_K)(y - y_K)v_{xy}] \\ & + \frac{1}{3}E(x)(x - x_K)w_{xxx}v_x - \frac{h_K^2}{3}w_{xxx}v \Big) + \frac{h_K^2}{3}\left(\int_{l_2^K} - \int_{l_4^K}\right) w_{xx} v dy, \end{aligned} \tag{0.10}$$

which is (4.28). □

References

[1] C. Chen and Y. Huang, *High Accuracy Theory of Finite Element Methods* (in Chinese), Hunan Science Press, P.R. China, 1995.

[2] K. Gerdes, J.M. Melenk, D. Schötzau and C. Schwab, *The hp-Version of the Streamline Diffusion Finite Element Method in Two Space Dimensions*, Math. Models Methods Appl. Sci. **11** (2001), 301-337. MR **2001m:**65168

[3] H. Han and R.B. Kellogg, *Differentiability properties of solutions of the equation $-\epsilon\Delta u + ru = f(x,y)$ in a square*, SIAM J. Math. Anal. **21** (1990), 394-408. MR **91e:**35025

[4] C. Johnson, A. Schatz, and L. Wahlbin, *Crosswind smear and pointwise errors in the streamline diffusion finite element method*, Math. Comp. **49** (1987), 25-38. MR **88i:**65130

[5] R.B. Kellogg, *Boundary layers and corner singularities for a self-adjoint problem*, in Boundary Value Problems and Integral Equations in Non-smooth Domains, M. Costabel, M. Dauge, and S. Nicaise eds., Marcel Dekker, New York, 1995, 121-149. MR **95i:**35046

[6] M. Křížek, P. Neittaanmäki, and R. Stenberg (Eds.), *Finite Element Methods: Superconvergence, Post-processing, and A Posteriori Estimates*, Lecture Notes in Pure and Applied Mathematics, Vol. 196, Marcel Dekker, Inc., New York, 1998. MR **98i:**65003

[7] R.D. Lazarov, L. Tobiska, and P.S. Vassilevski, *Stream-line diffusion least-squares mixed finite element methods for convection-diffusion problems*, East-West J. Numer. Math. **5** (1997), 249-264. MR **98k:**76091

[8] J. Li and M.F. Wheeler, *Uniformly convergent and superconvergence of mixed finite element methods for anisotropically refined grids*, SIAM J. Numer. Anal. **38** (2000), 770-798. MR **2001f:**65137

[9] Q. Lin and N. Yan, *Construction and Analysis of High Efficient Finite Elements* (in Chinese), Hebei University Press, P.R. China, 1996.

[10] T. Linß and M. Stynes, *Asymptotic analysis and Shishkin-type decomposition for an elliptic convection-diffusion problem*, J. Math. Anal. Appl. **261** (2001), 604-632. MR **2002h:**35039

[11] J.M. Melenk and C. Schwab, *hp FEM for reaction-diffusion equations I: Robust exponential convergence*, SIAM J. Numer. Anal. **35** (1998), 1520-1557. MR **99d:**65333

[12] J.M. Melenk and C. Schwab, *Analytic regularity for a singularly perturbed problem*, SIAM J. Math. Anal. **30** (1999), 379–40. MR **2000b:**35010

[13] J.J. Miller, E. O'Riordan, and G.I. Shishkin, *Fitted Numerical Methods for Singular Perturbation Problems*, World Scientific, Singapore, 1996. MR **98c:**65002

[14] K.W. Morton, *Numerical Solution of Convection-Diffusion Problems*, Chapman and Hall, London, 1996. MR **98b:**65004

[15] H.-G. Roos, *Layer-adapted grids for singular perturbation problems*, ZAMM Z. Angew. Math. Mech. **78** (1998), 291-309. MR **99d:**65301

[16] H.-G. Roos, M. Stynes, and L. Tobiska, *Numerical Methods for Singularly Perturbed Differential Equations*, Springer, Berlin, 1996. MR **99a:**65134

[17] A.H. Schatz, I.H. Sloan, and L.B. Wahlbin, *Superconvergence in finite element methods and meshes that are locally symmetric with respect to a point*, SIAM J. Numer. Anal. **33** (1996), 505-521. MR **98f:**65112

[18] A.H. Schatz and L.B. Wahlbin, *On the finite element method for singularly perturbed reaction-diffusion problems in two and one dimensions*, Math. Comp. **40** (1983), 47-89. MR **84c:**65137

[19] C. Schwab and M. Suri, *The p and hp versions of the finite element method for problems with boundary layers*, Math. Comp. **65** (1996), 1403-1429. MR **97a:**65067

[20] G.I. Shishkin, *Discrete approximation of singularly perturbed elliptic and parabolic problems* (in Russian), Russian Academy of Sciences, Ural Section, Ekaterinburg, 1992.

[21] M. Stynes and E. O'Riordan *A uniformly convergent Galerkin method on a Shishkin mesh for a convection-diffusion problem*, J. Math. Anal. Appl. **214** (1997), 36-54. MR **99f:**65177

[22] L.B. Wahlbin, *Local behavior in finite element methods*, in Handbook of Numerical Analysis Vol. II, P.G. Ciarlet and J.L. Lions eds., North-Holland Publishing Company, Amsterdam, 1991, 353-522. MR **92f:**65001

[23] L.B. Wahlbin, *Superconvergence in Galerkin Finite Element Methods*, Lecture Notes in Mathematics, Vol. 1605, Springer, Berlin, 1995. MR **98j:**65083

[24] Z. Zhang, *Superconvergent approximation of singularly perturbed problems*, Numer. Meth. PDEs **18** (2002), 374–395.

[25] G. Zhou, *How accurate is the streamline diffusion finite element method?* Math. Comp. **66** (1997), 31-44. MR **97f:**65171

Department of Mathematics, Wayne State University, Detroit, Michigan 48202
E-mail address: zzhang@math.wayne.edu