NEW PROOF OF A THEOREM OF OSGOOD'S IN THE CALCULUS OF VARIATIONS*

BY

OSKAR BOLZA

In the last number of the Transactions,† Professor OSGOOD has proved an important characteristic property of a strong minimum of an integral of the form

$$I = \int_{\tau_0}^{\tau_1} F(x, y, x', y')\, d\tau. \tag{1}$$

His proof, however, is rather complicated, and the following note is intended to give a simpler proof of the theorem.

§ 1.

Introduction of curvilinear coördinates.

Suppose the integral (1) is taken along a continuous curve C with continuously turning tangents:

$$C: \qquad x = \phi(\tau), \quad y = \psi(\tau) \qquad (\tau_0 \leqq \tau \leqq \tau_1)$$

joining two fixed points $A(\tau_0)$ and $B(\tau_1)$; further $\phi'^2 + \psi'^2 \neq 0$ in (τ_0, τ_1).

Concerning the function $F(x, y, x', y')$ we make the same assumptions as OSGOOD on p. 277, l. c., except the assumption $F > 0$, which is not necessary for the present proof.

Now introduce instead of the rectangular coördinates x, y any curvilinear coördinates

$$u = U(x, y), \quad v = V(x, y), \tag{2}$$

where U, V are single-valued functions with continuous first and second derivatives in a region T of the x,y-plane containing the curve C; in the same region their Jacobian is supposed $\neq 0$. Interpret u, v as the rectangular co-

* Presented to the Society at the Ithaca meeting, August 19, 1901. Received for publication September 2, 1901.

† Transactions of the American Mathematical Society, vol. 2, p. 273.

ordinates of a point in a u,v-plane and denote by T', C', A', B' the images of T, C, A, B respectively. Suppose further that the correspondence between T and T' is a one-to-one correspondence and that accordingly the inverse functions

$$x = X(u, v), \quad y = Y(u, v), \tag{3}$$

are single-valued functions with continuous first and second derivatives in T' and

$$D = \frac{\partial(X, Y)}{\partial(u, v)} \neq 0$$

in T'.

Then the integral I is changed into

$$I' = \int_{\tau_0}^{\tau_1} G(u, v, u', v')\, d\tau, \tag{4}$$

the function G of the four arguments u, v, u', v' being defined by

$$G(u, v, u', v') \equiv F(X, Y, X_u u' + X_v v', Y_u u' + Y_v v'), \tag{5}$$

where $X_u = \partial X/\partial u$, etc.

The integral I' is taken, in the u,v-plane, along the image C' of C.

From $I = I'$ it follows that if the curve C minimize the integral I, its image C' will minimize I', and vice versa; and if C be an extremal for I, C' must be an extremal for I', and vice versa. Further WEIERSTRASS'S function F_1 is an invariant for the above transformation, viz., if we denote the corresponding function derived from G by G_1, we obtain easily

$$G_1 = D^2 F_1. \tag{6}$$

Finally WEIERSTRASS'S E-function is an absolute invariant, i. e., if we denote the new E-function by E' we have:

$$\left\{\begin{array}{l} E'(u, v; u', v'; \bar{u}', \bar{v}') = E(x, y; x', y'; \bar{x}', \bar{y}') \\ \qquad\qquad \text{where} \\ x' = X_u u' + X_v v', \quad \bar{x}' = X_u \bar{u}' + X_v \bar{v}', \\ y' = Y_u u' + Y_v v', \quad \bar{y}' = Y_u \bar{u}' + Y_v \bar{v}', \end{array}\right. \tag{7}$$

as follows immediately from (5).

§ 2.

Proof of Osgood's theorem.

Now let

$$x = \phi(t, a), \quad y = \psi(t, a) \tag{8}$$

be a set of extremals for the integral I, satisfying the following conditions:

1. The functions ϕ, ψ are single-valued functions of t, a with continuous first and second derivatives in the region:

$$T_0 - \epsilon \leqq t \leqq T_1 + \epsilon, \quad |a - a_0| \leqq \kappa \qquad (\epsilon > 0).$$

2. The extremal $C_0 : x = \phi(t, a_0)$, $y = \psi(t, a_0)$ has no multiple point for $T - \epsilon \leqq t \leqq T_1 + \epsilon$, and passes through the two given points $A(t_0)$ and $B(t_1)$ where $T_0 < t_0 < t_1 < T_1$.

3. If we denote by $\Delta(t, a)$ the Jacobian

$$\Delta(t, a) = \frac{\partial(\phi, \psi)}{\partial(t, a)},$$

then

$$\Delta(t, a_0) \neq 0 \qquad \text{in} \qquad (T_0 - \epsilon, \ T_1 + \epsilon). \tag{9}$$

4. The inequality

$$F_1\big(\phi(t, a_0), \ \psi(t, a_0), \ \cos\lambda, \ \sin\lambda\big) > 0 \tag{10}$$

holds for every t of the interval $T_0 - \epsilon \leqq t \leqq T_1 + \epsilon$ and for every λ.

Under these circumstances if we denote by R_κ the region:

$$R_\kappa : \qquad T_0 \leqq t \leqq T_1, \quad |a - a_0| \leqq \kappa,$$

and denote by S_κ the image of R_κ in the x,y-plane, then κ can be taken so small that

1. $\Delta(t, a) \neq 0$ in R_κ.
2. $F_1(x, y, \cos\lambda, \sin\lambda) > 0$ for every x, y in S_κ and for every λ.
3. The correspondence between R_κ and S_κ is a *one-to-one correspondence*.*

The inverse functions

$$t = t(x, y), \qquad a = a(x, y)$$

will then be single-valued with continuous first and second derivatives in S_κ and their Jacobian will be $\neq 0$ in S_κ.

Then S_κ is a "field" surrounding the arc AB of the extremal C_0, and if

$$C: \qquad x = \bar{\phi}(\tau), \quad y = \bar{\psi}(\tau), \qquad (\tau_0 \leqq \tau \leqq \tau_1),$$

be any other curve with continuously turning tangents drawn from A to B in S_κ, for which $\bar{\phi}'^2 + \bar{\psi}'^2 \neq 0$, then WEIERSTRASS's theorem holds, according to which

$$\Delta I = I_{\bar{C}}(AB) - I_C(AB) = \int_{\tau_0}^{\tau_1} E(x, y; \ x', y'; \ \bar{x}', \bar{y}')\, d\tau, \tag{11}$$

* See KNESER, *Lehrbuch der Variationsrechnung*, § 14, and OSGOOD, l. c., p. 278. Both proofs have to be supplemented by the following preliminary lemma: If for every κ, however small, there existed points (x, y) in S_κ to which correspond in R_κ at least two distinct points (t', a') and (t'', a''), then there must exist, in R_κ, a point (t_2, a_0) such that in every vicinity of it pairs of distinct points can be found whose images in the x, y-plane coincide.

where x', y' refer to the extremal of the set (8) passing through x, y, and $\bar{x}'$, $\bar{y}'$ to the curve $\bar{C}$. Hence WEIERSTRASS infers that $\Delta I > 0$ by making use of the following theorem † connecting the functions E and F_1:

$$(12)\quad E(x, y;\ \cos\vartheta, \sin\vartheta;\ \cos\bar{\vartheta}, \sin\bar{\vartheta}) = (1-\cos\omega)F_1(x, y, \cos\vartheta^*, \sin\vartheta^*),$$

where $\omega = \bar{\vartheta} - \vartheta$; ϑ^* is an angle between ϑ and $\bar{\vartheta}$; and the angles are so measured that $|\omega| \overset{=}{<} \pi$.

Now let $0 < h < \kappa$ and use S_h in the analogous signification as S_κ; then OSGOOD'S theorem may be stated as follows: *There exists a positive quantity depending upon h, ϵ_h, such that for every curve C joining A and B drawn in the interior of S_κ but not wholly contained in S_h,*

$$\Delta I > \epsilon_h.$$

To prove this theorem it is now only necessary to introduce instead of x, y the curvilinear coördinates

$$(13)\qquad u = t(x, y), \quad v = a(x, y)$$

which satisfy for the regions S_κ and R_κ the conditions of § 1, and to make use of the remarks made there.

Accordingly the extremals for the integral I' are the lines $v =$ const., and, therefore, in the u,v-plane WEIERSTRASS'S theorem takes the form:

$$\Delta I = \Delta I' = \int_{s_0}^{s_1} E'(u, v;\ \cos 0, \sin 0;\ \cos\omega, \sin\omega)\,ds$$
$$= \int_{s_0}^{s_1} (1-\cos\omega)G_1(u, v, \cos\vartheta^*, \sin\vartheta^*)\,ds.$$

These integrals are taken along the image $\bar{C}'$ in the u,v-plane (i. e., t,a-plane) of the curve $\bar{C}$; ω denotes the angle between the positive tangent to $\bar{C}'$ in the point u, v and the positive u-axis; and s is the arc of the curve $\bar{C}'$.

But from (9), (10), and (6) it follows that we can assign a positive quantity m such that

$$G_1(u, v, \cos\lambda, \sin\lambda) \overset{=}{>} m > 0$$

for every u, v in R_κ and for every λ. Therefore

$$\Delta I \overset{=}{>} m\int_{s_0}^{s_1} (1-\cos\omega)\,ds,$$

that is

$$\Delta I \overset{=}{>} m\big(l - (t_1 - t_0)\big),$$

if l denotes the length of the curve $\bar{C}'$.

---

† *Lectures on the Calculus of Variations*, 1882.

Now suppose that $\bar{C}$ is not wholly contained in the interior of S_h and therefore passes through a point P of one of the two extremals $a = a_0 \pm h$, then $\bar{C}'$ passes through a point P' whose ordinate is $v = a_0 \pm h$. Hence l is greater

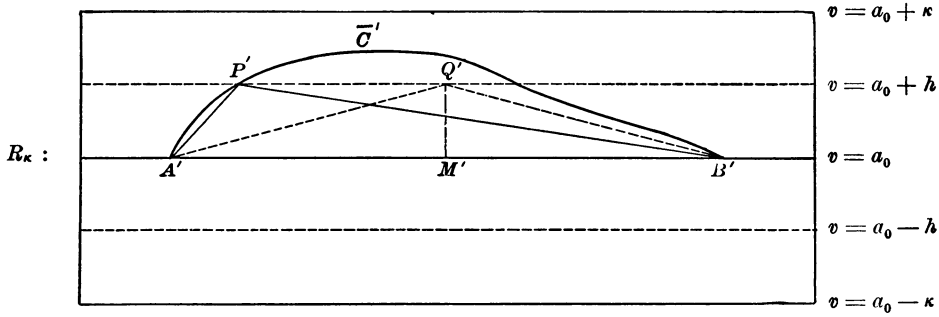

than or equal to the length of the broken line $A'P'B'$. But if we choose Q' on the same line $v =$ const. as P' so that $A'Q' = B'Q'$, then

$$A'P'B' \gtreqless A'Q'B',$$

and therefore

$$\Delta I \gtreqless 2m\left[\sqrt{h^2 + \left(\frac{t_1 - t_0}{2}\right)^2} - \frac{(t_1 - t_0)}{2}\right],$$

which proves OSGOOD's theorem.*

OSGOOD's theorem can easily be extended to the case where one endpoint, say B, is fixed, the other, A, movable on a given curve. For this purpose, it is only necessary to choose for the new coördinates KNESER's curvilinear coördinates u, v (KNESER, § 16); a slight modification of the above reasoning leads then to the inequality

$$\Delta I \gtreqless m[\sqrt{h^2 + (u_1 - u_0)^2} - (u_1 - u_0)].$$

---

* OSGOOD bases his proof upon the following lemma: "Let $f(x)$ be a single valued continuous function of x in the interval $a \leqq x \leqq b$, and let $f(x)$ have a continuous derivative $f'(x)$ at all points of this interval. Let $a < l \leqq b$ and $|f(l) - f(a)| = L > 0$. Then

$$\int_a^l f'(x)^2 dx \geqq \frac{L^3}{54(b-a)^2},$$

provided that $L < 3\sqrt{2}(b-a)$."

This lemma may be proved as follows: Since the value of the integral does not change if $f(x)$ is replaced by $M \pm f(x)$, M being a constant, we may confine ourselves to functions $f(x)$ for which $f(a) = 0$, $f(l) = L$. This remark reduces the question to the problem of minimizing the above integral with these given initial values. The solution is $y = L(x-a)/(l-a)$; it satisfies WEIERSTRASS' sufficient conditions for a minimum, and furnishes for the integral the minimum value: $(L^2)/(l-a) \gtreqless (L^2)/(b-a)$, which under the above inequality for L is greater than $\frac{1}{54}(L^3)/(b-a)^2$.

It is, however, to be remembered that the introduction of KNESER'S coördinates presupposes that

$$F\left(\phi(t, a),\ \psi(t, a),\ \phi'(t, a),\ \psi'(t, a)\right) > 0$$

in the region R_κ.

UNIVERSITY OF CHICAGO,
August 31, 1901.