TRANSACTIONS OF THE
AMERICAN MATHEMATICAL SOCIETY
Volume 366, Number 6, June 2014, Pages 3241–3273
S 0002-9947(2014)06025-X
Article electronically published on February 6, 2014

SYMMETRIC WHITNEY TOWER COBORDISM FOR BORDERED 3-MANIFOLDS AND LINKS

JAE CHOON CHA

Abstract. We introduce the notion of a symmetric Whitney tower cobordism between bordered 3-manifolds, aiming at the study of homology cobordism and link concordance. It is motivated by the symmetric Whitney tower approach to slicing knots and links initiated by T. Cochran, K. Orr, and P. Teichner. We give amenable Cheeger-Gromov ρ-invariant obstructions to bordered 3-manifolds being Whitney tower cobordant. Our obstruction is related to and generalizes several prior known results, and also gives new interesting cases. As an application, our method applied to link exteriors reveals new structures on (Whitney tower and grope) concordance between links with nonzero linking number, including the Hopf link.

1. Introduction

It is well known that *Whitney towers* and *gropes* play a key role in several important problems in low dimensional topology, particularly in the study of topology of 4-manifolds and concordance of knots and links. Whitney towers and gropes approximate embedded 2-disks, 2-spheres, and more generally embedded surfaces, in a 4-manifold. Roughly, a Whitney tower can be viewed as (the trace of) an attempt to apply Whitney moves repeatedly to remove intersection points of immersed surfaces in dimension 4; it consists of various layers of immersed Whitney disks which pair up intersection points of prior layers. A grope in a 4-manifold consists of embedded surfaces with disjoint interiors which represent essential curves on prior layer surfaces as commutators.

In this article we are interested in *symmetric* Whitney towers and gropes, which have a *height*. These are analogous to the commutator construction of the *derived series*. We remark that Whitney towers and gropes related to the *lower central series* are also often considered. Although these Whitney towers and gropes still give interesting structures concerning links and 4-dimensional topology (for example, see the recent remarkable work of J. Conant, R. Schneiderman, and P. Teichner surveyed in [CST11]), it is known that symmetric Whitney towers and gropes are much closer approximations to embedded surfaces that give extremely rich theory.

Our main aim is to study homology cobordism of 3-manifolds with boundary using symmetric Whitney towers in dimension 4 and amenable Cheeger-Gromov ρ-invariants. Our setting is strongly motivated by the symmetric Whitney tower approach to the knot (and link) slicing problem which was first initiated by T. Cochran, K. Orr, and P. Teichner [COT03], and the amenable L^2-theoretic technique for the

Received by the editors July 11, 2012 and, in revised form, November 10, 2012.
2010 *Mathematics Subject Classification.* Primary 57M25, 57M27, 57N70.
Key words and phrases. Whitney towers, gropes, link concordance, homology cobordism, amenable L^2-signatures.

Cheeger-Gromov ρ-invariants due to Orr and the author [CO12]. As a new application that known Whitney tower frameworks do not cover, we study concordance between links with nonzero linking number. In particular we investigate Whitney tower and grope concordance to the Hopf link.

Symmetric Whitney tower cobordism of bordered 3-manifolds. First we briefly introduce how we adapt the Whitney tower approach in [COT03] for homology cobordism of bordered 3-manifolds.

Recall that a 3-manifold M is *bordered* by a surface Σ if it is endowed with a marking homeomorphism of Σ onto ∂M. For 3-manifolds M and M' bordered by the same surface, one obtains a closed 3-manifold $M \cup_\partial -M'$ by glueing the boundary along the marking homeomorphism. A 4-manifold W is a *relative cobordism* from M to M' if $\partial W = M \cup_\partial -M'$.

A relative cobordism W from M to M' is a *homology cobordism* if the inclusions induce isomorphisms $H_*(M;\mathbb{Z}) \cong H_*(W;\mathbb{Z}) \cong H_*(M';\mathbb{Z})$. Initiated by S. Cappell and J. Shaneson [CS74], understanding homology cobordism of bordered manifolds is essential in the study of manifold embeddings, in particular knot and link concordance. This also relates homology cobordism to other key problems including topological surgery on 4-manifolds.

As a surgery theoretic Whitney tower approximation to a homology cobordism, we will define the notion of a *height h Whitney tower cobordism* W between bordered 3-manifolds ($h \in \frac{1}{2}\mathbb{Z}_{\geq 0}$). Roughly speaking, our height h Whitney tower cobordism is a relative cobordism between bordered 3-manifolds, which admits immersed framed 2-spheres satisfying the following: while the 2-spheres may not be embedded, they support a Whitney tower of height h, and form a "lagrangian" in such a way that if the 2-spheres were homotopic to embeddings, then surgery along these would give a homology cobordism. For a more precise description of a Whitney tower cobordism, see Definition 2.7.

It turns out that a height h Whitney tower cobordism can be deformed to another type of a relative cobordism satisfying a twisted homology analogue of the above Whitney tower condition, which we call an *h-solvable cobordism*. Roughly speaking, it is a cobordism which induces an isomorphism on H_1 and admits a certain "lagrangian" and "dual" for the twisted intersection pairing associated to (quotients by) derived subgroups of the fundamental group. See Definition 2.8 and Theorem 2.9 for details. Our h-solvable cobordism can be viewed as a relative version of the notion of an h-solution first introduced in [COT04].

Amenable Signature Theorem. In order to detect the nonexistence of a Whitney tower cobordism, we show that certain *amenable L^2-signatures*, or equivalently *Cheeger-Gromov $\rho^{(2)}$-invariants*, give obstructions to bordered 3-manifolds being height h Whitney tower cobordant. Interestingly, for the height $n.5$ obstructions stated below, we have two alternative hypotheses on the first L^2-Betti numbers: *zero* or *large enough*. In what follows $b_i^{(2)}(-;\mathcal{N}G)$ and $b_i(-;R)$ denote the L^2-Betti number over $\mathcal{N}G$ and the Betti number over R, namely the L^2- and R-dimension of $H_i(-;\mathcal{N}G)$ and $H_i(-;R)$ respectively.

Theorem 3.2 (Amenable Signature Theorem for solvable cobordism)**.** *Suppose W is a relative cobordism between two bordered 3-manifolds M and M', G is an amenable group lying in Strebel's class $D(R)$, $R = \mathbb{Z}/p$ or $\mathbb{Q}$, and $G^{(n+1)} = \{e\}$.*

Suppose $\phi\colon \pi_1(M \cup_\partial -M') \to G$ *factors through* $\pi_1(W)$*, and one of the following conditions holds:*

(I) W *is an* $n.5$*-solvable cobordism and* $b_1^{(2)}(M;\mathcal{N}G) = 0$*;*

(II) W *is an* $n.5$*-solvable cobordism,* $|\phi(\pi_1(M))| = \infty$*, and*

$$b_1^{(2)}(M \cup_\partial -M';\mathcal{N}G) \geq b_1(M;R) + b_2(M;R) + b_3(M;R) - 1; \text{ or}$$

(III) W *is an* $(n+1)$*-solvable cobordism.*

Then the Cheeger-Gromov invariant $\rho^{(2)}(M \cup_\partial -M', \phi)$ *vanishes.*

For the definition of amenable groups and Strebel's class $D(R)$ [Str74], see Definition 3.1. To prove Amenable Signature Theorem 3.2, we use extensively the L^2-theoretic techniques developed by Orr and the author in [CO12], [Cha]. For more details and related discussions, see Section 3.

Amenable Signature Theorem 3.2 generalizes several previously known cases (discussed in more detail in Section 3.3). First, it specializes to the amenable signature obstructions to knots being $n.5$-solvable given in [Cha], and Cochran-Orr-Teichner's PTFA signature obstructions [COT03]. Also, from our result it follows that Harvey's homology cobordism invariant ρ_n for closed 3-manifolds [Har08] associated to her torsion-free derived series is an obstruction to being Whitney tower cobordant.

Moreover, Amenable Signature Theorem 3.2 for condition (I) provides an interesting new case. In Section 3.2 we discuss some instances of bordered 3-manifolds for which the first L^2-Betti number vanishes. This will be used to give applications to links with nonvanishing linking number, as described below.

Symmetric Whitney tower concordance of links. Our setting for bordered 3-manifolds is useful in studying geometric equivalence relations of links defined in terms of Whitney towers and gropes. We recall that two m-component links L and L' in S^3 are *concordant* if there are m disjointly embedded locally flat annuli in $S^3 \times [0,1]$ cobounded by components of $L \times 0$ and $-L' \times 1$. Again, approximating embedded annuli by Whitney towers, one defines *height h (symmetric) Whitney tower concordance*: embedded annuli in the definition of concordance are replaced with transverse immersed annuli which admit a Whitney tower of height h (see Definition 2.12). *Height h (symmetric) grope concordance* between links is defined similarly, replacing disjoint annuli with disjoint height h gropes (see Definition 2.15).

Schneiderman showed that if L and L' are height h grope concordant, then they are height h Whitney tower concordant [Sch06]. Furthermore, following the lines of [COT03], one can observe that if two links are height $h+2$ Whitney tower concordant, then their *exteriors* are, as bordered 3-manifolds, height h Whitney tower cobordant (see Theorem 2.13). Therefore Amenable Signature Theorem 3.2 gives obstructions to links being Whitney tower (and grope) concordant.

Summarizing, we have the implications illustrated in Figure 1.

Application to links with nonvanishing linking number. As an application, we investigate concordance of links with nonvanishing linking number, particularly concordance to the Hopf link.

There are several known techniques to detect nonconcordant links in the literature, which reveal interesting structures peculiar to links up to concordance (even modulo knots). These include classical abelian invariants such as Fox-Milnor-type conditions for the (reduced) multi-variable Alexander polynomial and Levine-Tristram-type signature invariants (e.g., see K. Murasugi [Mur65], A. Tristram

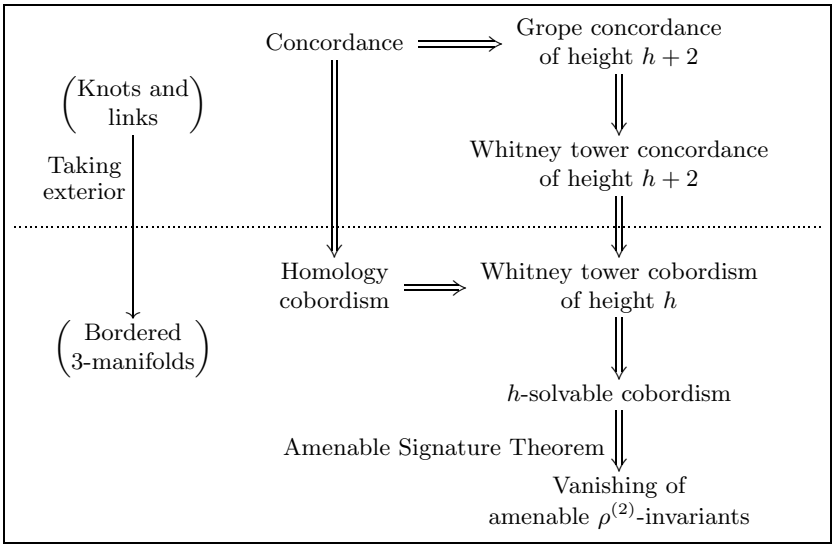

FIGURE 1. Whitney towers, gropes, and amenable signatures.

[Tri69], A. Kawauchi [Kaw78]), and the Witt class of the Blanchfield pairing (e.g., see J. Hillman's book [Hil02]). Also there are various signatures and twisted torsion invariants associated to various nonabelian "higher order" covers (e.g., see J. Levine [Lev94, Lev07], Cha-Ko [CK99b], S. Friedl [Fri05a], S. Harvey [Har08], Cochran-Harvey-Leidy [CHL08], Cha-Friedl [CF]), and there are Witt-class valued Hirzebruch-type invariants from iterated p-covers (see [Cha10, Cha09]). These newer techniques are mainly focused on link slicing problems. Geometric techniques such as covering link calculus and blowing down are also known to be useful in several cases (e.g., see Cochran-Orr [CO93], Cha-Ko [CK99a], Cha-Livingston-Ruberman [CLR08], Cha-Kim [CK08a]).

Compared to the slicing problem, the more general case of concordance between links with possibly nonvanishing linking number has been less studied. Note that the question of whether two given links are concordant is not directly translated to a link slicing problem, while for knots it can be done via a connected sum.

The case of linking number one two-component links has received some recent attention. It is remarkable that such links bear a certain resemblance to knots, where the Hopf link is analogous to the unknot. In this sense these may be viewed as "small" links. For example, while in many cases (e.g., for boundary links) there are large nilpotent representations of the fundamental group of a link complement which eventually lead us to interesting link concordance invariants, it can be seen that there are no useful nonabelian nilpotent representations for two-component links with linking number one, similar to the knot case.

Classical abelian invariants such as the Alexander polynomial give primary information for the linking number one case, and as a partial converse J. Davis showed that any two-component link with Alexander polynomial one is topologically concordant to the Hopf link [Dav06]. This result, which may be viewed as a link analogue of the well-known result of Freedman on Alexander polynomial one

knots [Fre84], illustrates another similarity between knots and "small" links. We remark that recently T. Kim, D. Ruberman, S. Strle, and the author have shown that Davis's result does not hold in the smooth category, even for links with unknotted components [CKRS12].

S. Friedl and M. Powell have recently developed Casson-Gordon style metabelian link invariants by generalizing techniques for knots, and detected interesting examples of links not concordant to the Hopf link [FP12, FP]. They conjectured that their invariant vanishes for links which are height 3.5 Whitney tower concordant to the Hopf link. Recently M. Kim has confirmed this conjecture, using our framework of Whitney tower cobordism. He has also related known abelian invariants to low height Whitney tower concordance for linking number one links.

Our method reveals new sophisticated structures concerning linking number one links not concordant to the Hopf link. This may be viewed as an analogue of the study of knots using higher order L^2-invariants, beyond abelian and metabelian invariants. An advantage of our setup for the higher order invariants is that we can use the *exterior* of a link instead of the zero-surgery manifold which is used in recent works on L^2-invariants for links. We remark that for two-component links with linking number one, the zero-surgery manifold is a homology 3-sphere and consequently has no interesting solvable representations; this is a reason why several recent techniques of higher order L^2-invariants do not apply directly to this case.

Using our Amenable Signature Theorem 3.2 applied to link exteriors, we prove the following result:

Theorem 4.1. *For any integer $n > 2$, there are links with two unknotted components which are height n grope concordant (and consequently height n Whitney tower concordant) to the Hopf link, but not height $n.5$ Whitney tower concordant (and consequently not height $n.5$ grope concordant) to the Hopf link.*

We remark that more applications of our methods, including those on homology cylinders, will be presented in other papers.

Results in this article hold in both the topological category (with locally flat submanifolds) and the smooth category. For a related discussion, see Remark 2.19. Manifolds are assumed to be connected, compact, and oriented, and $H_*(-)$ denotes homology with integral coefficients unless stated otherwise.

2. Whitney tower cobordism

In this section we formulate a notion of symmetric Whitney tower approximations of homology cobordism. This gives a setup generalizing the approach to the knot and link slicing problem initiated in [COT03]. In what follows, to make the exposition more readable, we discuss some motivations and backgrounds as well. Readers familiar with the notion of Whitney towers, gropes, and the approach of [COT03] may proceed to the next section after reading only key definitions and statements of our setup: Definitions 2.3 (0-lagrangian), 2.7 (Whitney tower cobordism), 2.8 (h-solvable cobordism), Theorems 2.9 (Whitney tower cobordism $\Rightarrow$ solvable cobordism), and 2.13 (Whitney tower/grope concordance $\Rightarrow$ Whitney tower cobordism).

2.1. Homology cobordism and H_1-cobordism of bordered 3-manifolds.

Recall that a relative cobordism W between bordered 3-manifolds M to M' is

a manifold with $\partial W = M \cup_\partial -M'$, and that W is a *(relative) homology cobordism* if $H_*(M) \cong H_*(W) \cong H_*(M')$ under the inclusion-induced maps. As an abuse of notation we often write $M \cup_\partial M'$ instead of $M \cup_\partial -M'$. Our primary example of a homology cobordism is obtained from knots and links.

Example 2.1 (Link exterior)**.** If L is a link in S^3, then the exterior $E_L = S^3-$ (open tubular neighborhood of L) is a 3-manifold bordered by the disjoint union of tori, where the marking is given canonically by the 0-linking framing of each component.

If L is concordant to L', then the concordance exterior (with rounded corners) is a relative homology cobordism from E_L to $E_{L'}$. In fact this conclusion holds if L is concordant to L' in a homology $S^3 \times [0,1]$.

The following is well known and easily verified: two links L and L' in S^3 are topologically concordant if and only if there is a topological homology cobordism W from E_L to $E_{L'}$ with $\pi_1(W)$ normally generated by meridians of L. The smooth analogue holds modulo the smooth Poincaré conjecture in dimension 4. Also, two links L and L' in homology 3-spheres are (topologically/smoothly) concordant in a (topological/smooth) homology $S^3 \times [0,1]$ if and only if their exteriors E_L and $E_{L'}$ are (topologically/smoothly) homology cobordant.

Relative H_1-cobordism of bordered 3-manifolds. Suppose M and M' are 3-manifolds bordered by the same surface Σ. As the first step toward a homology cobordism, one considers the following, which generalizes [COT03, Definition 8.1]. (See also [CK08b, Definition 2.1].)

Definition 2.2. We say that a relative cobordism W from M to M' is a *relative H_1-cobordism* if $H_1(M) \cong H_1(W) \cong H_1(M')$ under the inclusion-induced maps.

We will often say "homology cobordism" and "H_1-cobordism", omitting the word "relative", when it is clear that these are between bordered 3-manifolds from the context. We remark that in many cases a cobordism can be surgered, below the middle dimension, to an H_1-cobordism.

The next step is to investigate whether one can eliminate $H_2(W,M)$ by doing surgery; for an H_1-cobordism W, it is easily seen that $H_i(W,M) = 0$ for $i \neq 2$ and $H_2(W,M)$ is a free abelian group onto which $H_2(W)$ surjects. For the convenience of the reader a proof is given in Lemma 2.20 in Section 2.5 below.

Definition 2.3. Suppose W is an H_1-cobordism between bordered 3-manifolds M and M'. A subgroup $L \subset H_2(W)$ is called a 0-*lagrangian* if L projects onto a half-rank summand of $H_2(W,M)$ isomorphically and the intersection form $\lambda_0 \colon H_2(W) \times H_2(W) \to \mathbb{Z}$ vanishes on $L \times L$.

Definition 2.3, which uses integral coefficients, is a precursor to the notion of an n-lagrangian, which will be defined in the next subsection in terms of intersection forms over twisted coefficients.

We remark that one can switch the role of M and M' in Definition 2.3 as expected, since using Poincaré duality it can be seen that $L \subset H_2(W)$ projects isomorphically onto a half-rank summand in $H_2(W,M)$ if and only if L does in $H_2(W,M')$. We also remark that the following is a standard fact, which is proven along the lines of the standard surgery approach. We give proofs of these two facts in Section 2.5 below, for the convenience of the reader.

Proposition 2.4. *If an H_1-cobordism W between bordered 3-manifolds M and M' admits a 0-lagrangian L generated by disjoint framed 2-spheres embedded in W, then W can be surgered to a homology cobordism between M and M'.*

2.2. **Symmetric Whitney tower cobordism of bordered 3-manifolds.** As suggested in Proposition 2.4 above, one seeks disjointly embedded framed spheres generating a 0-lagrangian of an H_1-cobordism. As approximations of embeddings, we recall the notion of a symmetric Whitney tower.

Definition 2.5 ([COT03, Definition 7.7])**.** Suppose S is a collection of transverse framed surfaces immersed in a 4-manifold W.

(1) A *symmetric Whitney tower of height* n based on S is a sequence $\mathcal{C}_0, \dots, \mathcal{C}_n$ such that $\mathcal{C}_0 = S$, and for $k = 1, \dots, n$, $\mathcal{C}_k$ is a collection of transverse framed immersed Whitney disks that pair up all the intersection points of $\mathcal{C}_{k-1}$ and have interior disjoint to surfaces in $\mathcal{C}_0 \cup \cdots \cup \mathcal{C}_{k-1}$.
(2) A *symmetric Whitney tower of height* $n.5$ based on S is a sequence of collections $\mathcal{C}_0, \dots, \mathcal{C}_n$, $\mathcal{C}_{n+1}$ such that $\mathcal{C}_0, \dots, \mathcal{C}_{n+1}$ satisfy the defining condition of a Whitney tower of height $n+1$ except that the interior of $\mathcal{C}_{n+1}$ is allowed to meet $\mathcal{C}_n$, while it is still required to be disjoint to $\mathcal{C}_0 \cup \cdots \cup \mathcal{C}_{n-1}$.

We call $\mathcal{C}_k$ the *kth stage*, and Whitney disks in $\mathcal{C}_k$ are said to be of *height* k.

Here, intersection points of $\mathcal{C}_k$ designate both self-intersections of a surface in $\mathcal{C}_k$ and intersections of distinct surfaces. (We remark that we may assume that no Whitney disk has self-intersections by "Whitney tower splitting" [Sch06, Section 3.7].) We always assume that Whitney towers are framed in the sense that for each Whitney disk D that pairs intersections of two sheets, the unique framing on D gives rise to the Whitney section on ∂D, which is defined to be the push-off of ∂D along the tangential direction of one sheet and along the normal direction of another sheet (avoiding the tangential direction of D). As a reference, for example, see [CST12, Section 2.2] and [Sco05, p. 54].

We remark that if a collection of framed immersed 2-spheres S_i admits a Whitney tower of height > 0, then it is easily seen that both the intersection number $\lambda(S_i, S_j) \in \mathbb{Z}[\pi_1(W)]$ and the self-intersection number $\mu(S_i) \in \mathbb{Z}[\pi_1(W)]/\langle g - \bar{g} \rangle$ vanish for all i and j. (See [FQ90, Section 1.7] for the definition of λ and μ.) Consequently the untwisted intersection λ_0 automatically vanishes on the spheres S_i. Also, the converse is true:

Lemma 2.6. *A collection of framed immersed 2-spheres S_i admits a Whitney tower of height* 0.5 *if and only if $\lambda(S_i, S_j) = 0$ and $\mu(S_i) = 0$ for all i and j.*

Proof. The only if direction has been discussed above. Conversely, if λ and μ vanish on the spheres S_i, then the intersection points of the spheres S_i can be paired up in such a way that a Whitney circle for each pair is null-homotopic. Applying the Immersion Lemma in [FQ90, p. 13] and the standard boundary twisting operation [FQ90, p. 16], one obtains immersed framed Whitney disks, which form a Whitney tower of height 0.5. □

Definition 2.7. Suppose W is an H_1-cobordism.

(1) We say that a submodule $L \subset H_2(W; \mathbb{Z}[\pi_1(W)]) \cong \pi_2(W)$ is a *framed spherical lagrangian* if L projects onto a 0-lagrangian in $H_2(W)$ and is generated by framed immersed 2-spheres for which λ and μ vanish.

(2) We say that W is a *height h Whitney tower cobordism* if there is a framed spherical lagrangian generated by framed immersed 2-spheres admitting a Whitney tower of height h. If there exists such a W, we say that M is *height $n.5$ Whitney tower cobordant* to M'.

From Lemma 2.6, the following is immediate: there is a framed spherical lagrangian if and only if there exist immersed 2-spheres that generate a 0-lagrangian in $H_2(W)$ and support a Whitney tower of height 0.5.

2.3. **Solvable cobordism of bordered 3-manifolds.** Following the ideas of [COT03, Definitions 8.5, 8.7 and Theorems 8.6, 8.8], we relate Whitney towers to lagrangians admitting *duals*. Later this will enable us to obtain amenable L^2-signature invariant obstructions. Our definition below, which is for bordered 3-manifolds, is also similar to the notion of h-cylinders considered by Cochran and Kim for *closed* 3-manifolds with first Betti number one [CK08b, Definition 2.1].

We fix some notation. For a group G, $G^{(n)}$ denotes the nth derived subgroup defined by $G^{(0)} = G$, $G^{(n+1)} = [G^{(n)}, G^{(n)}]$. For a 4-manifold W with $\pi = \pi_1(W)$, let

$$\lambda_n \colon H_2(W; \mathbb{Z}[\pi/\pi^{(n)}]) \times H_2(W; \mathbb{Z}[\pi/\pi^{(n)}]) \longrightarrow \mathbb{Z}[\pi/\pi^{(n)}]$$

be the intersection form. We say that a closed surface immersed in W is an *n-surface* if it represents an element in $H_2(W; \mathbb{Z}[\pi/\pi^{(n)}])$, namely it lifts to the regular cover of W with fundamental group $\pi^{(n)}$.

Definition 2.8. Suppose W is an H_1-cobordism between bordered 3-manifolds M and M' with $\pi = \pi_1(W)$. Let $m = \frac{1}{2} \operatorname{rank} H_2(W, M)$.

(1) A submodule $L \subset H_2(W; \mathbb{Z}[\pi/\pi^{(n)}])$ is an *n-lagrangian* if L projects onto a 0-lagrangian for $H_2(W, M)$ and λ_n vanishes on L.
(2) For an n-lagrangian ($n \geq k$) or a framed spherical lagrangian L, homology classes $d_1, \dots, d_m \in H_2(W; \mathbb{Z}[\pi/\pi^{(k)}])$ are *k-duals* of L if L is generated by $\ell_1, \dots, \ell_m \in L$ whose projections $\ell'_i \in H_2(W; \mathbb{Z}[\pi/\pi^{(k)}])$ satisfy $\lambda_k(\ell'_i, d_j) = \delta_{ij}$.
(3) The 4-manifold W is an *$n.5$-solvable cobordism* (resp. *n-solvable cobordism*) if it has an $(n+1)$-lagrangian (resp. n-lagrangian) with n-duals. If there exists an h-solvable cobordism from M to M', we say that M is *h-solvably cobordant* to M'.

We remark that the notion of an h-solvable cobordism is a relative analogue of an h-solution introduced in [COT03], as mentioned in the introduction.

Theorem 2.9. *Suppose M and M' are bordered 3-manifolds. Then for the following statements,* (1) $\Rightarrow$ (2) $\Rightarrow$ (3) *holds:*

(1) *M and M' are height $n.5$ Whitney tower cobordant.*
(2) *There is an H_1-cobordism between M and M' which has a framed spherical lagrangian admitting n-duals.*
(3) *M and M' are $n.5$-solvably cobordant.*

Proof. First, (2) implies (3) since a framed spherical lagrangian is an $(n+1)$-lagrangian. The implication (1) $\Rightarrow$ (2) is proven by an argument similar to [COT03, Proof of Theorem 8.4] (see the part entitled " the induction step $r \mapsto r-1$"). The

point is that for our purpose we do not need the assumption of [COT03] that the concerned 4-manifolds are spin. We give details for concreteness and for the reader's convenience.

Suppose W is an H_1-cobordism from M to M', and a spherical lagrangian for W is generated by framed immersed 2-spheres ℓ_i which support a Whitney tower of height h and admit r-duals d_j. We will show, if $h \geq 1.5$, that there is an H_1-cobordism from M to M' with a spherical lagrangian generated by framed immersed 2-spheres which support a Whitney tower of height $h-1$ and admit $(r+1)$-duals. From this our conclusion follows by an induction on r starting from $(h,r) = (n.5, 0)$; one can start the induction since a spherical lagrangian always admits 0-duals by Lemma 2.21, stated and proved later (see Section 2.5).

The claim is proven as follows. Let $\mathcal{C}$ be the given Whitney tower of height h. By pushing down intersections as in [FQ90, Section 2.5] we may assume that each d_j does not meet the height > 0 part of $\mathcal{C}$. By tubing if necessary, one may assume the geometric intersection of ℓ_i and d_j is precisely δ_{ij}. Denote the collection of the Whitney circles pairing intersections of the spheres ℓ_i by $\{\alpha_k\}$, and let Δ_k be the height 1 Whitney disk bounded by α_k. Choose one of the two intersection points lying on α_k, and around it, choose a linking torus T_k (see [FQ90, p. 12]) which is disjoint from the surfaces ℓ_i and d_j. We may assume that T_k intersects $\mathcal{C}$ at a single point on Δ_k. Let x_k and y_k be the standard basis curves on T_k based at $T_k \cap \mathcal{C}$. Since x_k and y_k are meridians of some of the ℓ_i, these are conjugate to elements of $\pi_1(d_i)^{(1)}$. Since $\pi_1(d_i) \subset \pi_1(W)^{(r)}$, it follows that T_k is an $(r+1)$-surface in W.

Now do surgery on W along push-offs of the α_k taken along the Δ_k direction to a new 4-manifold, in which we have framed embedded 2-disks b_k bounded by α_k. By Whitney moves along the b_k, isotope the spheres ℓ_i to disjointly embedded framed 2-spheres. Doing surgery along these 2-spheres, we obtain another new 4-manifold, say W'. The framed immersed 2-spheres $\ell'_k := \Delta_k \cup_\partial b_k$ together with height ≥ 2 Whitney disks of $\mathcal{C}$ form a Whitney tower of height $h-1$. Since $h-1 \geq 0.5$, the intersection λ and self-intersection μ vanish on the spheres ℓ'_k. Direct computation of the rank of H_2 shows that the spheres ℓ'_k form a framed spherical lagrangian for W'. Since the geometric intersection of ℓ'_k and T_l is precisely δ_{kl}, the tori T_k are $(r+1)$-duals. □

Remark 2.10. In [COT03] they make an additional assumption that the concerned 4-manifolds are spin. If one adds the similar spin condition and self-intersection vanishing condition to our definitions, then the arguments in [COT03] can be carried out to show that all the statements (1), (2), and (3) in Theorem 2.9 are equivalent. A key technical point is that the spin assumption implies that k-duals are represented by surfaces which are automatically *framed*.

Remark 2.11. One can also show the following: *if M and M' are height n Whitney tower cobordant, then M and M' are n-solvably cobordant.* Indeed, applying the induction as in the above proof, one obtains a spherical lagrangian supporting a height one Whitney tower together with $(n-1)$-duals. Applying the induction argument once more, one now obtains framed immersed spheres ℓ'_k and the tori T_k which are n-surfaces, but now the spheres ℓ_k may have nonvanishing intersection λ. Nonetheless, since the tori T_k are mutually disjoint, one sees that T_k form an n-lagrangian and ℓ_k are their n-duals.

2.4. **Symmetric Whitney tower concordance and grope concordance of links.** Recall that two m-component links L and L' in S^3 are *concordant* if there is a collection of m disjoint cylinders properly embedded in $S^3 \times [0,1]$, joining the corresponding components of $L \times 0$ and $-L' \times 1$. We always assume links are ordered.

It is natural to think of immersed cylinders supporting Whitney towers as an approximation of honest concordance.

Definition 2.12. Two m-component links L and L' in S^3 are *height h (symmetric) Whitney tower concordant* if there is a collection of transverse framed cylinders C_i ($i = 1, \dots, m$) immersed in $S^3 \times [0,1]$ which joins the 0-framed ith components of $-L \times 0$ and $L' \times 1$, and there is a Whitney tower of height $h-1$ based on the cylinders C_i.

Note that "height $h-1$" is not a typo. This is because of the following convention: the immersed annuli C_i are said to be the height one part of the Whitney tower concordance. ($-L \times 0 \cup L' \times 1$ is said to be the height zero part; see also [COT03, Definition 7.7].)

The following is a Whitney tower analogue of the fact that the exteriors of concordant links are, as bordered 3-manifolds, relatively homology cobordant.

Theorem 2.13. *If two links are height $h+2$ Whitney tower concordant, then their exteriors are height h Whitney tower cobordant, as bordered 3-manifolds.*

The proof is parallel to that of [COT03, Theorem 8.12]. Details are omitted.

Another well-known notion generalizing link concordance is grope concordance. We consider *symmetric* gropes only, which have a *height*. For the reader's convenience we give the definitions below.

Definition 2.14. Let n be a nonnegative integer. A *grope of height n* based on a circle γ is defined inductively as follows. A grope of height 0 based on γ is γ itself. A *grope of height n based on γ* consists of a genus g oriented surface S bounded by γ, and $2g$ symmetric gropes of height $n-1$ based on a circle which is attached to S along $2g$ simple closed curves $a_1, \dots, a_g, b_1, \dots, b_g$ on S which form a symplectic basis (that is, the geometric intersections are given by $a_i \cdot a_j = 0 = b_i \cdot b_j$, $a_i \cdot b_j = \delta_{ij}$). A *grope of height $n.5$ based on γ* consists of a genus g oriented surface S bounded by γ and g symmetric gropes of height n based on a circle attached to S along the half basis curves a_i, and g symmetric gropes of height $n-1$ based on a circle attached to S along the remaining curves b_j. The surface S above is called the *1st stage* of the grope.

An *annular grope of height h* is defined by replacing S above with a genus g oriented surface with two boundary components.

A grope embeds into $\mathbb{R}^3$ in a standard way, and then into $\mathbb{R}^4$ via $\mathbb{R}^3 \subset \mathbb{R}^4$. A *framed embedding of a grope* in a 4-manifold is an embedding of a regular neighborhood of its standard embedding in $\mathbb{R}^4$.

Definition 2.15. Two m-component links L and L' in S^3 are *height h grope concordant* if there are m framed annular gropes G_i ($i = 1, \dots, m$) disjointly embedded in $S^3 \times [0,1]$ which are cobounded by the zero-framed ith components of $-L \times 0$ and $L \times 1$.

Schneiderman showed that if a knot is height h grope concordant to the unknot, then the knot is height h Whitney tower concordant to the unknot [Sch06, Corollary 2]. One can verify that his proof in [Sch06, Section 6] can be carried out for the case of grope concordance between links:

Theorem 2.16 (Link version of [Sch06, Corollary 2])**.** *Two links are height h Whitney tower cobordant if they are height h grope concordant.*

We remark that the converse of Theorem 2.16 is unknown, while the asymmetric analogue (obtained by replacing "height" with "order") and its converse are both true due to [Sch06].

Applying Theorem 2.13 and Theorem 2.9, we immediately obtain the following result:

Corollary 2.17. *If two links are height $n+2.5$ Whitney tower concordant or height $n+2.5$ grope concordant, then their exteriors are $n.5$-solvably cobordant, as bordered 3-manifolds.*

Remark 2.18. Since $S^3 \times [0,1]$ is spin, one can strengthen the conclusions of Theorem 2.13 and Corollary 2.17, using Remark 2.10: there exist a spin height h Whitney tower cobordism and a spin h-solvable cobordism between the exteriors.

Remark 2.19. Everything in this paper can be carried out in both the topological (assuming submanifolds are locally flat) and the smooth category. Indeed, regarding our setup given in this section, one can see that the topological and smooth cases are equivalent in the following sense. (1) *Two bordered 3-manifolds are topologically h-solvably cobordant if and only if these are smoothly h-solvably cobordant.* (2) *Two links are topologically height h Whitney tower (resp. grope) concordant if and only if these are smoothly height h Whitney tower (resp. grope) concordant.* We give only a brief outline of the proof, omitting the details. (1) From a topological h-solvable cobordism, one obtains a smooth 4-manifold by taking a connected sum with $|E_8|\#8\overline{\mathbb{C}P^2}$ if the Kirby-Siebenmann invariant is nonzero, and then with copies of $S^2 \times S^2$, where $|E_8|$ is Freedman's manifold with intersection form E_8 [FQ90, Chapter 10]. One can see that the result is an h-solvable cobordism, using the fact that $E_8\#8\overline{\mathbb{C}P^2}$ and $S^2 \times S^2$ are simply connected and have a 0-lagrangian with 0-duals. (2) Appealing to Quinn's smoothing theorem [FQ90, §8.1], a topological height h Whitney tower concordance in $S^3 \times [0,1]$ deforms to a smoothly immersed 2-complex in such a way that new intersections are paired up by topological Whitney disks. It turns out that similar smoothing arguments repeatedly applied to the topological Whitney disks give a smooth Whitney tower concordance of desired height. For a topological grope concordance, the above smoothing arguments combined with Schneiderman's method [Sch06, Theorem 5] that converts Whitney towers to gropes give a desired smooth grope concordance.

2.5. **Basic properties of an H_1-cobordism.** In this section we give proofs of a few basic observations used in the earlier parts of this section, for completeness and for the convenience of the readers.

Lemma 2.20. *Suppose W is an H_1-cobordism between bordered 3-manifolds M and M'. Then the following hold:*

(1) *$H_i(W,M) = 0 = H_i(W,M')$ for $i \neq 2$.*
(2) *W is a homology cobordism if and only if $H_2(W,M) = 0$.*

(3) *The map* $H_2(W) \to H_2(W,M)$ *is surjective, and consequently* $H_2(W,M) = \operatorname{Coker}\{H_2(M) \to H_2(W)\}$. *Similarly for* M'.
(4) $H_2(W,M)$ *and* $H_2(W,M')$ *are torsion-free abelian groups of the same rank.*

Proof. (3) and $(1)_{i<2}$ follow from the long exact sequence and the H_1-cobordism condition. By the Poincaré duality for relative cobordism and the universal coefficient theorem, we have $H_2(W,M) = \operatorname{Hom}(H_2(W,M'),\mathbb{Z})$. From this (4) follows. Also it implies $(1)_{i>2}$, since $H_i(W,M) = \operatorname{Hom}(H_{4-i}(W,M'),\mathbb{Z}) = 0$ for $i > 2$. Now (2) follows from (1). □

Lemma 2.21. *Suppose* W *is an* H_1*-cobordism between bordered 3-manifolds* M *and* M' *and* $\ell_1,\dots,\ell_m \in H_2(W)$.

(1) *If* ℓ_i *form a basis of a summand of* $H_2(W,M)$, *then there are* $d_1,\dots,d_m \in H_2(W)$ *satisfying* $\lambda_0(\ell_i,d_j) = \delta_{ij}$.
(2) *If* $\lambda_0(\ell_i,\ell_j) = 0$ *for any* i,j *and there exist* $d_1,\dots,d_m \in H_2(W)$ *satisfying* $\lambda_0(\ell_i,d_j) = \delta_{ij}$, *then* $\{\ell_i,d_j\}$ *is a basis of a summand of* $H_2(W,M)$. *Consequently, if in addition* $m = \frac{1}{2}\operatorname{rank} H_2(W,M)$, *then* $\{\ell_i\}$ *generates a 0-lagrangian and* $\{\ell_i,d_j\}$ *is a basis of* $H_2(W,M)$.

We remark that there are several useful consequences of Lemma 2.21. First, it follows that any 0-lagrangian has 0-duals. From this Proposition 2.4 follows, since surgery on framed embedded spheres generating a 0-lagrangian eliminates the 0-duals as well. Finally, in Definition 2.3, the roles of M and M' can be switched.

Proof. (1) Let $PD\colon H_2(W,M) \to \operatorname{Hom}(H_2(W,M'),\mathbb{Z})$ be the relative Poincaré duality isomorphism. Extend the classes ℓ_i to a basis of $H_2(W,M)$ and choose a basis of $H_2(W,M') = \operatorname{Hom}(\operatorname{Hom}(H_2(W,M'),\mathbb{Z}),\mathbb{Z})$ dual to $PD(\ell_i)$. Since $H_2(W) \to H_2(W,M')$ is surjective, the dual basis elements are represented by some $d_i \in H_2(W)$. By definition, viewing λ_0 as $H_2(W) \to \operatorname{Hom}(H_2(W),\mathbb{Z})$, λ_0 is the composition of inclusion-induced maps with the isomorphism

$$PD\colon H_2(W,M) \longrightarrow \operatorname{Hom}(H_2(W,M'),\mathbb{Z}).$$

Thus $\lambda_0(\ell_i,d_j) = PD(\ell_i)(d_j) = \delta_{ij}$, as desired.

(2) Let $A = \mathbb{Z}^{2m}$, which is endowed with the standard basis $\{e_i\}$, and $f\colon A \to H_2(W,M)$ and $g\colon A \to H_2(W,M')$ be the maps sending e_i to the image of ℓ_i for $i \le m$ and to the image of d_{i-m} for $i > m$. Then the composition

$$A \xrightarrow{f} H_2(W,M) \xrightarrow{PD} \operatorname{Hom}(H_2(W,M'),\mathbb{Z}) \xrightarrow{g^*} \operatorname{Hom}(A,\mathbb{Z})$$

is represented by the block matrix $\left[\begin{smallmatrix} 0 & I \\ I & * \end{smallmatrix}\right]$. In particular it is an isomorphism. Since all the terms in the composition are free abelian groups of rank $2m$, it follows that f is an isomorphism. □

3. Amenable Signature Theorem for Whitney towers

We denote by $\mathcal{N}G$ the group von Neumann algebra of a discrete countable group G. For a finitely generated $\mathcal{N}G$-module M, the L^2*-dimension* $\dim^{(2)} M \in \mathbb{R}_{\ge 0}$ can be defined. For more information on $\mathcal{N}G$ and the L^2-dimension, see Lück's book [Lüc02] and his paper [Lüc98]. Also [Cha, Section 3.1] gives a quick summary of the definition and properties of the L^2-dimension which are useful for our purpose.

The algebra $\mathcal{N}G$ is endowed with the natural homomorphism $\mathbb{Z}G \to \mathcal{N}G$, so that one can view $\mathcal{N}G$ as an $\mathcal{N}G$-$\mathbb{Z}G$ bimodule. For a finite CW pair (X, A) endowed with $\pi_1(X) \to G$, its cellular homology $H_*(X, A; \mathcal{N}G)$ with coefficients in $\mathcal{N}G$ is defined to be the homology of the chain complex $\mathcal{N}G \otimes_{\mathbb{Z}G} C_*(X, A; \mathbb{Z}G)$. We denote the *$L^2$-Betti number* by

$$b_i^{(2)}(X, A; \mathcal{N}G) = \dim^{(2)} H_i(X, A; \mathcal{N}G).$$

When the choice of $\pi_1(X) \to G$ is clearly understood, $b_i^{(2)}(X, A; \mathcal{N}G)$ is denoted by $b_i^{(2)}(X, A)$.

We denote by $b_i(X, A; R)$ the ordinary Betti number $\dim_R H_i(X, A; R)$ for a field R, particularly for $R = \mathbb{Q}$ or $\mathbb{Z}/p$. We write $b_i(X, A) = b_i(X, A; \mathbb{Q})$, as usual.

For a closed 3-manifold M and a homomorphism $\phi\colon \pi_1(M) \to G$ into a discrete countable group G, we denote the von Neumann-Cheeger-Gromov ρ-invariant by $\rho^{(2)}(M, \phi) \in \mathbb{R}$. See, for example, [COT03, Section 5], as well as [CW03, Har08, Cha08, CO12], as references providing definitions and properties of $\rho^{(2)}(M, \phi)$ that are useful for our purpose.

Definition 3.1. (1) A discrete group G is *amenable* if there is a finitely additive measure on G which is invariant under the left multiplication.

(2) For a commutative ring R with unity, a group G lies in *Strebel's class* $D(R)$ if a homomorphism $\alpha\colon P \to Q$ between projective RG-modules is injective whenever $1_R \otimes_{RG} \alpha\colon R \otimes_{RG} P \to R \otimes_{RG} Q$ is injective [Str74].

The main result of this section is stated below.

Theorem 3.2 (Amenable Signature Theorem for solvable cobordism)**.** *Suppose W is a relative cobordism between two bordered 3-manifolds M and M', G is an amenable group lying in $D(R)$, $R = \mathbb{Z}/p$ or $\mathbb{Q}$, and $G^{(n+1)} = \{e\}$. Suppose $\phi\colon \pi_1(M \cup_\partial M') \to G$ extends to $\pi_1(W)$, and either one of the following conditions holds:*

(I) *W is an $n.5$-solvable cobordism and $b_1^{(2)}(M; \mathcal{N}G) = 0$.*

(II) *W is an $n.5$-solvable cobordism, $|\phi(\pi_1(M))| = \infty$, and*

$$b_1^{(2)}(M \cup_\partial M'; \mathcal{N}G) \geq b_1(M; R) + b_2(M; R) + b_3(M; R) - 1.$$

(III) *W is an $(n+1)$-solvable cobordism.*

Then $\rho^{(2)}(M \cup_\partial M', \phi) = 0$.

Remark 3.3. (1) The class of amenable groups in $D(R)$ is large. For example see [CO12], especially Lemma 6.8 and the discussion above it. As a special case, Theorem 3.2 can be applied when G is a PTFA group satisfying $G^{(n+1)} = \{e\}$.

(2) Case (I) provides a new interesting case. Section 3.2 gives some useful instances to which case (I) applies. In particular case (I) will be used to provide new applications to links with nonvanishing linking number in this paper. See Section 4. Cases (II) and (III) are closely related to previously known results. See Section 3.3. Further applications of (II) and (III) will be given in other papers.

(3) The assumption $|\phi(\pi_1(M))| = \infty$ in case (II) is not severe, since in many cases we are interested in infinite covers of M to extract deeper information.

Recall from Corollary 2.17 that if two links are height $h+2$ Whitney tower (or grope) concordant, then their exteriors are h-solvable cobordant. Therefore Theorem 3.2 also obstructs height $n+2.5$ and $n+3$ Whitney tower (and grope) concordance of links.

The proof of Theorem 3.2 is given in Section 3.1. Readers who are more interested in its applications and relationship with previously known results may skip the proof and proceed to Sections 3.2, 3.3, and then to Section 4.

3.1. **Proof of Amenable Signature Theorem 3.2.** To prove Theorem 3.2, we need estimations of various L^2-dimensions. One of the primary ingredients is the following result which appeared in [Cha]:

Theorem 3.4 ([Cha, Theorem 3.11]). (1) *Suppose G is amenable and in $D(R)$ with $R=\mathbb{Q}$ or $\mathbb{Z}/p$, and C_* is a projective chain complex over $\mathbb{Z}G$ with C_n finitely generated. Then we have*

$$\dim^{(2)} H_n(\mathcal{N}G \underset{\mathbb{Z}G}{\otimes} C_*) \le \dim_R H_n(R \underset{\mathbb{Z}G}{\otimes} C_*).$$

(2) *In addition, if $\{x_i\}_{i\in I}$ is a collection of n-cycles in C_n, then for the submodules $H \subset H_n(\mathcal{N}G\otimes C_*)$ and $\overline{H} \subset H_n(R\otimes C_*)$ generated by $\{[1_{\mathcal{N}G}\otimes x_i]\}_{i\in I}$ and $\{[1_R\otimes x_i]\}_{i\in I}$, respectively, we have*

$$\dim^{(2)} H_n(\mathcal{N}G \underset{\mathbb{Z}G}{\otimes} C_*) - \dim^{(2)} H \le \dim_R H_n(R \underset{\mathbb{Z}G}{\otimes} C_*) - \dim_R \overline{H}.$$

Lemma 3.5 below states various Betti number observations for an H_1-cobordism. We remark that only Lemma 3.5 (1), (2) are used in the proof of Amenable Signature Theorem 3.2 (I) and (III). Lemma 3.5 (3)–(7) are used in the proof of case (II).

Lemma 3.5. *Suppose W is a relative H_1-cobordism between M and M', $R=\mathbb{Q}$ or $\mathbb{Z}/p$, and $\phi\colon \pi_1(W)\to G$ is a homomorphism into an amenable group G in $D(R)$. Then the following hold:*

(1) $b_i^{(2)}(W,M)=0$ *for* $i\neq 2$.
(2) $b_2^{(2)}(W,M)=b_2(W,M)=b_2(W,M;R)$.
(3) $b_0^{(2)}(W,\partial W)=0=b_4^{(2)}(W)$.
(4) $b_1^{(2)}(W,\partial W)=0=b_3^{(2)}(W)$ *if either* $\partial M\neq\emptyset$ *or* $\operatorname{Im}\{\pi_1(M)\to\pi_1(W)\to G\}$ *is infinite.*
(5) $b_4^{(2)}(W,\partial W)=0=b_0^{(2)}(W)$ *if* $\operatorname{Im}\{\pi_1(W)\to G\}$ *is infinite.*
(6) $b_1(W,\partial W)=b_3(W)=b_3(M)$.
(7) $b_2(W)=b_2(M)+b_2(W,M)$ *and* $b_2(W;R)=b_2(M;R)+b_2(W,M;R)$.

Proof. Recall that W, M, M' are all assumed to be connected by our convention.

(1) Applying Theorem 3.4 (1) to the chain complex $C_*(W,M;\mathbb{Z}G)$, it follows that $b_i^{(2)}(W,M)\le b_i(W,M;R)$. Thus $b_i^{(2)}(W,M;\mathcal{N}G)=0$ for $i\neq 2$ since $b_i(W,M;R)=0$ for $i\neq 2$ by Lemma 2.20 (1) and an easy application of the universal coefficient theorem.

(2) Note that $b_2(W,M)=b_2(W,M;R)$ by Lemma 2.20 (1), (4) and the universal coefficient theorem. Since the Euler characteristic of (W,M) can be computed using either $b_i(-)$ or $b_i^{(2)}(-;\mathcal{N}G)$, from (1) it follows that $b_2^{(2)}(W,M;\mathcal{N}G)=b_2(W,M)$.

(3) Since W is connected and ∂W is nonempty, we may assume that there is no 0-cell in the CW complex structure of the pair $(W, \partial W)$. It follows immediately that $b_0^{(2)}(W, \partial W) = 0$. By duality, $b_4^{(2)}(W) = b_0^{(2)}(W, \partial W) = 0$.

(4) First we show that $b_0^{(2)}(M, \partial M) = 0$; if $\partial M \neq \emptyset$, then $b_0^{(2)}(M, \partial M) = 0$ as in (3). If the image of $\pi_1(M)$ in G, say H, is infinite, then $\dim^{(2)} H_0(M; \mathcal{N}G) = \dim^{(2)} \mathcal{N}G \otimes_{\mathbb{C}G} \mathbb{C}[G/H] = 0$ by [Lüc02, Lemma 6.33], [Lüc98, Lemma 3.4].

Now consider the long exact sequence of the triple $(W, \partial W, M')$ combined with an excision isomorphism:

$$H_1(W, M'; \mathcal{N}G) \longrightarrow H_1(W, \partial W; \mathcal{N}G) \longrightarrow H_0(\partial W, M'; \mathcal{N}G) \cong H_0(M, \partial M; \mathcal{N}G).$$

From (1) above with M' in place of M, it follows that $b_1^{(2)}(W, \partial W) = 0$. By duality, $b_3^{(2)}(W) = 0$.

(5) By the argument in (4), $|\operatorname{Im}\{\pi_1(W) \to G\}| = \infty$ implies $b_0^{(2)}(W) = 0$. By duality, $b_4^{(2)}(W, \partial W) = 0$.

(6) The first equality follows from Poincaré duality. By Lemma 2.20 (1), $b_3(W, M) = 0 = b_4(W, M)$. From the long exact sequence of (W, M), the second equality follows.

(7) The conclusion follows from the exact sequence

$$H_3(W, M) \longrightarrow H_2(M) \longrightarrow H_2(W) \longrightarrow H_2(W, M) \longrightarrow H_1(M) \longrightarrow H_1(W)$$

by observing that $H_3(W, M) \cong H^1(W, M') = 0$ and $H_1(M) \cong H_1(W)$. Similarly for R-coefficients. □

Proof of Theorem 3.2. Recall from our assumption that W is an H_1-cobordism between M and M' and $\phi\colon \pi_1(W) \to G$ is a homomorphism where G is amenable and in $D(R)$ and $G^{(n+1)} = \{e\}$.

Since $\partial W = M \cup_\partial M'$ over G, the $\rho^{(2)}$-invariant is computed by the formula

$$\rho^{(2)}(M \cup_\partial M', \phi) = \operatorname{sign}^{(2)} W - \operatorname{sign} W,$$

where $\operatorname{sign}^{(2)} W$ denotes the L^2-signature of W over $\mathcal{N}G$, and $\operatorname{sign} W$ is the ordinary signature.

Since $H_2(W) \to H_2(W, M)$ is surjective by Lemma 2.20, the ordinary intersection pairing of W is defined on $H_2(W, M)$ as a nonsingular pairing. Furthermore, since there is a 0-lagrangian, this intersection pairing is of the form $\left[\begin{smallmatrix} 0 & I \\ I & * \end{smallmatrix}\right]$. From this it follows that $\operatorname{sign} W = 0$.

In the remaining part of the proof we show $\operatorname{sign}^{(2)} W = 0$. By definition $\operatorname{sign}^{(2)} W$ is the L^2-signature of the intersection form

$$H_2(W; \mathcal{N}G) \times H_2(W; \mathcal{N}G) \longrightarrow \mathcal{N}G.$$

This induces a hermitian form, say λ_A, on

$$A = \operatorname{Im}\{H_2(W; \mathcal{N}G) \longrightarrow H_2(W, \partial W; \mathcal{N}G)\},$$

and λ_A is L^2-nonsingular in the sense of [Cha, Section 3.1], namely both the kernel and cokernel of the associated homomorphism $A \to A^* = \operatorname{Hom}(A, \mathcal{N}G)$ given by $a \mapsto (b \mapsto \lambda(b, a))$ have L^2-dimension zero. We have $\operatorname{sign}^{(2)} W = \operatorname{sign}^{(2)} \lambda_A$ since the intersection form vanishes on the image of $H_2(\partial W; \mathcal{N}G)$.

Now we consider the three given cases. To simplify notation we write $\pi = \pi_1(W)$, $m = \frac{1}{2} b_2(W, M)$.

Case (I). For notational convenience, we exchange the roles of M and M', namely assume $b_1^{(2)}(M') = 0$. Suppose L is an $(n.5)$-lagrangian in $H_2(W;\mathbb{Z}[\pi/\pi^{(n+1)}])$. Since $G^{(n+1)}$ is trivial, $\phi\colon \pi \to G$ induces a homomorphism $\pi/\pi^{(n+1)} \to G$. We denote by L' and L'' the images of L in $H_2(W,M;\mathcal{N}G)$ and $H_2(W,\partial W;\mathcal{N}G)$ respectively.

Note that the images of L in $H_2(W,M;R)$ and $H_2(W,\partial W;R)$ have R-dimension m, since the image of L in $H_2(W;R)$ has 0-duals by Lemma 2.21 (1). Applying Theorem 3.4 (2) to a collection of 2-cycles in $C_*(W,M;\mathbb{Z}G)$ generating the submodule $L' \subset H_2(W,M;\mathcal{N}G)$, and then by applying Lemma 3.5 (2), we obtain

$$\dim^{(2)} L' \geq b_2^{(2)}(W,M) - b_2(W,M;R) + m = m.$$

By duality we have $b_2^{(2)}(M',\partial M') = b_1^{(2)}(M') = 0$. Looking at the exact sequence of the triple $(W,\partial W,M)$,

$$H_2(M',\partial M';\mathcal{N}G) \longrightarrow H_2(W,M;\mathcal{N}G) \xrightarrow{\alpha} H_2(W,\partial W;\mathcal{N}G),$$

the second homomorphism α is L^2-monic, namely its kernel is of L^2-dimension zero. From this and the above paragraph, it follows that $\dim^{(2)} \alpha(L') = \dim^{(2)} L' \geq m$, that is, $\dim^{(2)} L'' \geq m$. (Recall that $\alpha(L') = L''$ by definition.) On the other hand, since the map $H_2(W;\mathcal{N}G) \to H_2(W,\partial W;\mathcal{N}G)$ factors through $H_2(W,M;\mathcal{N}G)$, we have $\dim^{(2)} A \leq b_2^{(2)}(W,M) = 2m$ by Lemma 3.5 (2).

Summarizing, λ_A vanishes on the submodule L'' satisfying $\dim^{(2)} L'' \geq \frac{1}{2}\dim^{(2)} A$. Now we apply the L^2-version of the "topologist's signature vanishing criterion": if $\lambda\colon A \times A \to \mathcal{N}G$ is an L^2-nonsingular hermitian form over $\mathcal{N}G$ and there is a submodule $H \subset A$ such that $\lambda(H \times H) = 0$ and $\dim^{(2)} H \geq \frac{1}{2}\dim^{(2)} A$, then $\operatorname{sign}^{(2)} \lambda = 0$. (See [Cha, Proposition 3.7].) In our case, it follows that $\operatorname{sign}^{(2)} \lambda_A = 0$. This completes the proof of (I).

Case (II). Recall the assumption that W is an $n.5$-solvable cobordism, $|\phi(\pi_1(M))| = \infty$, and $b_1^{(2)}(M \cup_\partial M') \geq b_1(M;R) + b_2(M;R) + b_3(M;R) - 1$. Let A, L'' be as in Case (I). We will use alternative estimates of the L^2-dimensions to show that $\dim^{(2)} L'' \geq \frac{1}{2}\dim^{(2)} A$. First, applying Theorem 3.4 (2) to (the 2-cycles generating) L'' as a submodule of $H_2(W,\partial W;\mathcal{N}G)$ and then using Poincaré duality, we obtain

$$\begin{aligned}\dim^{(2)} L'' &\geq b_2^{(2)}(W,\partial W) - b_2(W,\partial W;R) + m\\ &= b_2^{(2)}(W) - b_2(W;R) + m.\end{aligned}$$

By looking at the homology long exact sequence for $(W,\partial W)$, we have

$$\begin{aligned}\dim^{(2)} A &= b_2^{(2)}(W,\partial W) - b_1^{(2)}(\partial W) + b_1^{(2)}(W)\\ &= b_2^{(2)}(W) - b_1^{(2)}(\partial W) + b_1^{(2)}(W)\end{aligned}$$

since $b_1^{(2)}(W,\partial W) = 0$ by Lemma 3.5 (4). It follows that

$$2\dim^{(2)} L'' - \dim^{(2)} A \geq b_2^{(2)}(W) - b_1^{(2)}(W) - 2b_2(W;R) + b_1^{(2)}(\partial W) + 2m.$$

Computing the Euler characteristic of W using $b_i(W;R)$ and then using $b_i^{(2)}(W)$, we obtain

$$b_2^{(2)}(W) - b_1^{(2)}(W) = b_2(W;R) - b_1(W;R) + 1 - b_3(M;R)$$

by Lemma 3.5 (3), (4), (5), and (6). Plugging this into the last inequality and then using the fact $H_1(W;R) \cong H_1(M;R)$ and Lemma 3.5 (7), it follows that

$$\begin{aligned} 2\dim^{(2)} L'' - \dim^{(2)} A &\geq b_1^{(2)}(\partial W) - b_1(W;R) - b_2(W;R) - b_3(M;R) + 2m + 1 \\ &= b_1^{(2)}(\partial W) - b_1(M;R) - b_2(M;R) - b_3(M;R) + 1. \end{aligned}$$

Therefore $\dim^{(2)} L'' \geq \frac{1}{2}\dim^{(2)} A$ under our hypothesis. This proves (II).

Case (III). Now suppose W is an $(n+1)$-solvable cobordism. Suppose that L is an $(n+1)$-lagrangian generated by $\ell_1, \dots, \ell_m \in H_2(W;\mathbb{Z}[\pi/\pi^{(n+1)}])$ and $d_1, \dots, d_m \in H_2(W;\mathbb{Z}[\pi/\pi^{(n+1)}])$ are $(n+1)$-duals satisfying $\lambda_{n+1}(\ell_i, d_j) = \delta_{ij}$. Let ℓ_i'' be the image of ℓ_i in $H_2(W, \partial W; \mathcal{N}G)$. The images $d_j'' \in H_2(W;\mathcal{N}G)$ of d_j are dual to ℓ_i'' with respect to the intersection pairing $H_2(W,\partial W;\mathcal{N}G) \times H_2(W;\mathcal{N}G) \to \mathcal{N}G$. It follows that ℓ_i'' are linearly independent in $H_2(W,\partial W;\mathcal{N}G)$ over $\mathcal{N}G$. Therefore, the classes ℓ_i'' generate a free $\mathcal{N}G$-module $L'' \subset A \subset H_2(W,\partial W;\mathcal{N}G)$ of rank m, and in particular $\dim^{(2)} L'' = m$. Since $\dim^{(2)} A \leq b_2^{(2)}(W,M) = 2m$ as in case (I), it follows that $\dim^{(2)} L'' \geq \frac{1}{2}\dim^{(2)} A$. This completes the proof of (III). □

3.2. **Vanishing of the first L^2-Betti number.** In this subsection we discuss some cases to which Amenable Signature Theorem 3.2 (I) applies. We begin with a general statement providing several examples with vanishing first L^2-Betti number, which generalizes [Cha, Lemma 3.12], [COT03, Proposition 2.11].

Proposition 3.6. *Suppose G is amenable and lies in $D(R)$ for $R = \mathbb{Z}/p$ or $\mathbb{Q}$. Suppose $A \to X$ is a map between connected finite complexes A and X inducing a surjection $H_1(A;R) \to H_1(X;R)$. If $\phi\colon \pi_1(X) \to G$ is a homomorphism which induces an injection $\pi_1(A) \to G$, then $b_1^{(2)}(X;\mathcal{N}G) = b_1^{(2)}(A;\mathcal{N}G) = 0$.*

Proof. By the assumption, $H_1(X,A;R) = 0$. By applying Theorem 3.4 (1) to the chain complex $C_*(X,A;\mathbb{Z}G)$, we obtain $b_1^{(2)}(X,A) = 0$. From the $\mathcal{N}G$-coefficient homology long exact sequence for (X,A), it follows that $b_1^{(2)}(X) \leq b_1^{(2)}(A)$. Since the induced map $\pi_1(A) \to G$ is injective, the G-cover of A is a disjoint union of copies of the universal cover of A. Consequently $H_1(A;\mathbb{C}G) = 0$. By the universal coefficient spectral sequence, $H_1(A;\mathcal{N}G) = \operatorname{Tor}_1^{\mathbb{C}G}(\mathcal{N}G, H_0(A;\mathbb{C}G))$. Since G is amenable, $b_1^{(2)}(A) = \dim^{(2)} \operatorname{Tor}_1^{\mathbb{C}G}(\mathcal{N}G, H_0(A;\mathbb{C}G)) = 0$ by [Lüc02, Theorem 6.37]. □

Exteriors of two-component links with nonvanishing linking number.

Theorem 3.7. *Suppose L is a two-component link with exterior M, and suppose either* (i) *$R = \mathbb{Q}$ and $\operatorname{lk}(L) \neq 0$, or* (ii) *$R = \mathbb{Z}/p$ and $\operatorname{lk}(L)$ is relatively prime to p. Suppose G is an amenable group in $D(R)$. If $\phi\colon \pi_1(M) \to G$ is a homomorphism which the abelianization $\pi_1(M) \to \mathbb{Z}^2$ factors through, then $b_1^{(2)}(M;\mathcal{N}G) = 0$.*

Proof. Let A be a (toral) boundary component of M. From the linking number condition, it follows that $H_1(A;R) \to H_1(M;R)$ is an isomorphism. Also, the composition

$$\mathbb{Z}^2 = \pi_1(A) \longrightarrow \pi_1(M) \xrightarrow{\text{ab}} \mathbb{Z}^2$$

is injective, since by tensoring it with R one obtains $H_1(A;R) \to H_1(M;R)$. Therefore by Proposition 3.6 we conclude that $b_1^{(2)}(M) = 0$. □

We will investigate an application of Theorem 3.2 (II) to this case in Section 4.

Knot exteriors. Proposition 3.6 also applies to $(X, A) = (M, \mu)$, where M is the exterior (or the zero-surgery manifold) of a knot and μ is a meridian. Indeed this case is no more than [Cha, Lemma 3.12], as done in [Cha, Proof of Theorem 3.2]. In the special case of a PTFA group G, a similar result appeared earlier in [COT03, Proposition 2.11].

3.3. **Relationship with and generalizations of previously known results.** Here we discuss some known results on L^2-signature obstructions as special cases of Theorem 3.2.

Obstructions to knots being $n.5$-solvable. In [COT03], the notion of an h-solvable knot was first introduced. A knot K is defined to be h-solvable if its zero-surgery bounds a 4-manifold W called an h-solution (see [COT03, Definitions 1.2, 8.5, 8,7]), which is easily seen to be a spin h-solvable cobordism between the exterior of K and that of a trivial knot. The following theorem, which appeared in [Cha], is an immediate consequence of our Amenable Signature Theorem 3.2 (see also the last paragraph of Section 3.2).

Theorem 3.8 ([Cha, Theorem 1.3])**.** *If K is an $n.5$-solvable knot, $R = \mathbb{Q}$ or $\mathbb{Z}/p$, G is an amenable group in $D(R)$, $G^{(n+1)} = \{e\}$, and $\phi\colon \pi_1(M(K)) \to G$ is a homomorphism that sends a meridian to an infinite order element and extends to an $n.5$-solution, then $\rho^{(2)}(M(K), \phi) = 0$.*

We note that [Cha, Theorem 3.2], which is a slightly stronger version of Theorem 3.8, is also a consequence of Theorem 3.2. Also, the following theorem of Cochran-Orr-Teichner [COT03] is a consequence of our Theorem 3.2 since it follows from Theorem 3.8 as pointed out in [Cha]:

Theorem 3.9 ([COT03, Theorem 4.2])**.** *If K is an $n.5$-solvable knot, G is poly-torsion-free-abelian, $G^{(n+1)} = \{e\}$, and $\phi\colon \pi_1(M(K)) \to G$ is a nontrivial homomorphism extending to an $n.5$-solution, then $\rho^{(2)}(M(K), \phi) = 0$.*

Remark 3.10. On the other hand, the homology cobordism result and concordance result given in [CO12, Theorem 7.1] and [Cha, Theorem 1.2] are potentially stronger than our Amenable Signature Theorem 3.2; in particular these do *not* require that the group G is solvable. It is an extremely interesting open question if certain non-solvable amenable signatures actually reveal something beyond solvable groups.

Harvey's ρ_n-invariant and Whitney tower cobordism. In this subsection we observe that the homology cobordism invariants of Harvey [Har08] are indeed invariant under Whitney tower cobordism.

For a group G, Harvey defined a series of normal subgroups $G = G_H^{(0)} \supset G_H^{(1)} \supset \cdots \supset G_H^{(n)} \supset \cdots$ which is called the *torsion-free derived series* [CH05, Har08]. A key theorem of Harvey [Har08, Theorem 4.2] says the following: for a closed 3-manifold M, $\rho_n(M) := \rho^{(2)}(M, \pi_1(M) \to \pi_1(M)/\pi_1(M)_H^{(n+1)}) \in \mathbb{R}$ is a homology cobordism invariant. This can be strengthened as follows:

Theorem 3.11. *Suppose M and M' are closed 3-manifolds. Let $b_i^{(2)}(M)$ be the L^2-Betti number over $\mathcal{N}(\pi_1(M)/\pi_1(M)_H^{(n+1)})$, and define $b_i^{(2)}(M')$ similarly.*

(1) *If M and M' are height $n+1$ Whitney tower cobordant, then $\rho_n(M) = \rho_n(M')$.*

(2) *If M and M' are height $n.5$ Whitney tower cobordant and either $b_1^{(2)}(M) = 0$ or*

$$b_1(M) \neq 0 \text{ and } b_1^{(2)}(M) + b_1^{(2)}(M') \geq b_1(M) + b_2(M) + b_3(M) - 1,$$

then $\rho_n(M) = \rho_n(M')$.

Proof. We will prove (1) and (2) simultaneously. By Theorem 2.9 and Remark 2.11, there is an h-solvable cobordism W between M and M', where $h = n+1$ in case (1) and $h = n.5$ in case (2). We have $H_1(M) \cong H_1(W)$. Also

$$H_2(W; \mathbb{Z}[\pi_1(W)/\pi_1(W)^{(n)}]) \to H_2(W)$$

is surjective, since there is an n-lagrangian admitting n-duals. Since $\pi_1(W)^{(n)} \subset \pi_1(W)_H^{(n)}$, we can apply the Dwyer-type injectivity theorem [CH08, Theorem 2.1] to $\pi_1(M) \to \pi_1(W)$ to conclude that the quotient $\pi_1(M)/\pi_1(M)_H^{(n+1)}$ injects into $\Gamma := \pi_1(W)/\pi_1(W)_H^{(n+1)}$ under the inclusion-induced map. By the L^2-induction property (for example, see [CG85, p. 8 (2.3)], [COT03, Proposition 5.13]), it follows that $\rho_n(M) = \rho^{(2)}(M, \pi_1(M) \to \Gamma)$ and $b_i^{(2)}(M) = b_i^{(2)}(M, \mathcal{N}\Gamma)$. Similarly for M'.

Our Γ satisfies $\Gamma^{(n+1)} = \{e\}$ and is known to be amenable and in $D(\mathbb{Q})$. Also, $b_1(M) \neq 0$ implies $|\Gamma| = \infty$. Therefore by applying Theorem 3.2 (III) and (II), it follows that $\rho^{(2)}(M, \pi_1(M) \to \Gamma) = \rho^{(2)}(M', \pi_1(M') \to \Gamma)$ from the hypothesis of (1) and (2) respectively. □

Harvey's ρ_n-invariants and h-solvable links. Harvey and Cochran-Harvey also gave ρ_n-invariant obstructions to being h-solvable [Har08, Theorem 6.4], [CH08, Theorem 4.9, Corollary 4.10]. Their relationship with our Amenable Signature Theorem 3.2 is best illustrated in the case of links, as discussed below.

The notion of an h-solution of a link L in [COT03] is related to a spin h-solvable cobordism between the exterior E_L of L and the trivial link exterior E_O, similar to the knot case, though the details are slightly more technical. We give an outline below, omitting details. Let N be the exterior of the standard slice disks in D^4 for a trivial link O. Given a spin h-solvable cobordism W between E_L and E_O, it can be seen that $V := W \cup_{E_O} N$ is an h-solution for L in the sense of [COT03] by a straightforward computation of H_1 and H_2. Conversely, if V is an h-solution for L, it turns out that there is an embedding of N into V in such a way that $W := \overline{V - N}$ is an h-solvable cobordism between E_L and E_O. In fact, if one chooses disjoint arcs γ_i in V joining a fixed basepoint in $\mathrm{int}(V)$ to a meridian μ_i of the ith component of L, then a regular neighborhood of $\bigcup_i(\gamma_i \cup \mu_i)$ is homeomorphic to N.

Now suppose L has m components and $\pi_1(W) \to G$ is given as in Theorem 3.2. Then, it turns out that the Betti number condition in Theorem 3.2 (II) is equivalent to $b_1^{(2)}(M_L) \geq m-1$, if the image of each meridian of L in G has infinite order. So, for G PTFA, one recovers the Cochran-Harvey rank condition in [CH08, Theorem 4.9, Corollary 4.10]. Indeed, in our Betti number condition $b_1^{(2)}(E_L \cup_\partial E_O) \geq b_1(E_O; R) + b_2(E_O; R) + b_3(E_O; R) - 1$, one can show that $b_1(E_O) = m$, $b_2(E_O) = m-1$, and furthermore $b_1^{(2)}(E_L \cup_\partial E_O) = b_1^{(2)}(E_L) + b_1^{(2)}(E_O)$ and $b_1^{(2)}(E_L) = b_1^{(2)}(M_L)$, $b_1^{(2)}(E_O) = m-1$. From this it follows that our Amenable Signature Theorem 3.2 (II) specializes to the ρ_n-invariant obstruction to links being $n.5$-solvable [CH08, Corollary 4.10].

4. Grope and Whitney tower concordance to the Hopf link

In this section we give an application to concordance of links with nonvanishing linking number. Our goal is to prove the following result:

Theorem 4.1. *For any integer $n > 2$, there are links with two unknotted components which are height n grope concordant (and consequently height n Whitney tower concordant) to the Hopf link, but not height $n.5$ Whitney tower concordant (and consequently not height $n.5$ grope concordant) to the Hopf link.*

We remark that the blow-down technique, namely performing (± 1)-surgery along one component and then studying the concordance of the resulting knot, might be useful in showing that our links in Theorem 4.1 are not slice. Nonetheless, it is unknown whether the blow-down technique could yield any other interesting conclusions about the height of Whitney towers and gropes than our method does.

4.1. **Satellite construction and capped gropes.** To construct our example, we will use a standard satellite construction (often called infection) described as follows: let L be a link in S^3, and η be an unknotted circle in S^3 which is disjoint from L. Remove a tubular neighborhood of η from S^3, and then attach the exterior of a knot J along an orientation reversing homeomorphism on the boundary that identifies the meridian and 0-longitude of J with the 0-longitude and meridian of η, respectively. The resulting 3-manifold is again homeomorphic to S^3, and the image of L under this homeomorphism is a new link in S^3, which we denote by $L(\eta, J)$. We note that the same construction applied to a framed circle η embedded in a 3-manifold M gives a new 3-manifold, which we denote by $M(\eta, J)$.

Recall that a *capped grope* is defined to be a grope with 2-disks attached along each of the standard symplectic basis curves of the top layer surfaces (see, e.g., [FQ90, Chapter 2]). These additional 2-disks are called the *caps*, and the remaining grope part is called the *body*. We remark that an embedded capped grope in this paper designates a capped grope embedded in a 4-manifold. In particular not only the body but also all caps are embedded, while capped gropes with immersed caps are often used in the literature.

Our construction of grope concordance depends on the following observation. For convenience, we use the following terms. Recall that we denote the exterior of a link L by E_L.

Definition 4.2. We call (L, η) a *satellite configuration of height n* if L is a link in S^3, η is an unknotted circle in S^3 disjoint to L, and the 0-linking parallel of η in $E_\eta = E_\eta \times 0$ bounds a height n capped grope G embedded in $E_\eta \times [0,1]$ with a body disjoint to $L \times [0,1]$. We call G a *satellite capped grope for* (L, η).

We remark that by definition a satellite configuration (L, η) of height zero is merely a link L with an unknotted curve η disjoint to L.

Proposition 4.3 (Composition of satellite configurations)**.** *Suppose (L, η) is a satellite configuration of height n, and (K, α) is a satellite configuration of height $m > 0$ with K a knot. Let $L' = L(\eta, K)$. Then, viewing α as a curve in $E_{L'}$ via $\alpha \subset E_K \subset E_K \cup E_{L \cup \eta} = E_{L'}$, (L', α) is a satellite configuration of height $n + m$.*

Proof. Suppose H is a satellite capped grope of height m for (K, α). We may assume that the intersection of H with a tubular neighborhood of $K \times [0,1]$ consists

of disjoint disks $D_1, \dots, D_r$ lying on caps of H and that ∂D_i is of the form $\mu \times t_i$, where μ is a fixed meridian of K and $t_i \in (0,1)$ are distinct points.

Suppose G is a satellite capped grope for (L, η). Let U be the union of r parallel copies of G in $E_\eta \times [0,1]$ such that the boundary of U is $\bigcup_i$(parallel copy of η) $\times\, t_i$. Let $V = H \cap (E_K \times [0,1])$. Note that the boundary of V is $\bigcup_i \mu \times t_i$ and μ is identified with a parallel copy of η under the satellite construction. Now

$$U \cup V \subset \big(E_\eta \times [0,1]\big) \cup \big(E_K \times [0,1]\big) \cong S^3 \times [0,1]$$

is a desired satellite capped grope of height $n+m$ for (L', α). □

We remark that the construction used above may be compared to [Hor10, Section 3].

4.2. **Building blocks.**

A seed link. We start with a two-component link L_0 given in Figure 2. (The curve η and the dotted arc γ are not parts of L_0.)

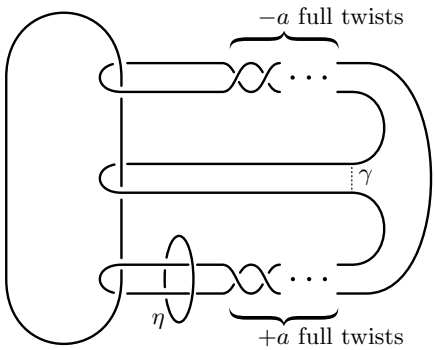

FIGURE 2. A link which is concordant to the Hopf link.

The following properties of L_0 and η in Figure 2 will be crucially used in this section. In fact any (L_0, η) with these properties can be used in place of our (L_0, η).

Lemma 4.4. (1) *The link L_0 is concordant to the Hopf link.*
(2) *(L_0, η) is a satellite configuration of height one.*
(3) *For $a \neq 0$, the Alexander module $A = H_1(E_{L_0}; \mathbb{Z}[x^{\pm 1}, y^{\pm 1}])$ of L_0 is a nonzero $\mathbb{Z}[x^{\pm 1}, y^{\pm 1}]$-torsion module generated by the homology class of η.*

In (3) above, the variables x and y correspond to the right and left components in Figure 2, respectively.

Proof. (1) Applying a saddle move along the dotted arc γ (see Figure 2), the right component splits into two new components. One of these (which is the "broken middle tine") forms a Hopf link together with the left component of L_0. The other new component is easily isotoped to a separated unknotted circle since the $\pm a$ twistings are now eliminated. This gives a concordance in $S^3 \times [0,1]$ consisting of two annuli, one of which is a straight product of the left component of L_0 and $[0,1]$, and another annulus has one saddle point and one local maximum.

(2) By tubing the obvious 2-disk, it is easily seen that η bounds an embedded genus one surface in the 3-space which is disjoint to L_0. In addition one can attach

two caps which meet the left and right components of L_0 once, respectively. This gives a desired satellite capped grope of height one.

(3) A straightforward homology computation shows that L_0 has Alexander module

$$H_1(E_{L_0};\mathbb{Z}[x^{\pm1},y^{\pm1}]) = \mathbb{Z}[x^{\pm1},y^{\pm1}]/\langle f\overline{f}\rangle$$

generated by $[\eta]$, where $f = a(x+y^{-1}-xy^{-1}-1)+1$. Details are as follows.

The link L_0 can be represented as the leftmost diagram in Figure 3, where $(\pm1/a)$-surgery curves are used instead of the $\pm a$ twists. By isotopy, we obtain the rightmost surgery diagram in Figure 3 with L_0 given as the standard Hopf link in S^3. By taking the universal abelian cover of the exterior $S^1\times S^1\times[0,1]$ of this Hopf link and then taking the lifts of the $(\pm1/a)$-surgery curves, we obtain the universal abelian cover of E_{L_0} as a surgery diagram in $\mathbb{R}^2\times[0,1]$, which is shown in Figure 4. It is isotopic to the "flattened" diagram in Figure 5, where the covering transformations x and y are given by shifting right and down, respectively. Obviously the framing on the lifts of the $(1/a)$-surgery curve is again $1/a$. For the $(-1/a)$-surgery curve, since the $+1$ twists on the horizontal bands in Figure 5 contribute an additional -2 to the writhe of the base curve, if the framing on a lift is p/q, then the base curve framing must be $(p-2q)/q$. It follows that $p/q=(2a-1)/a$ as in Figure 5.

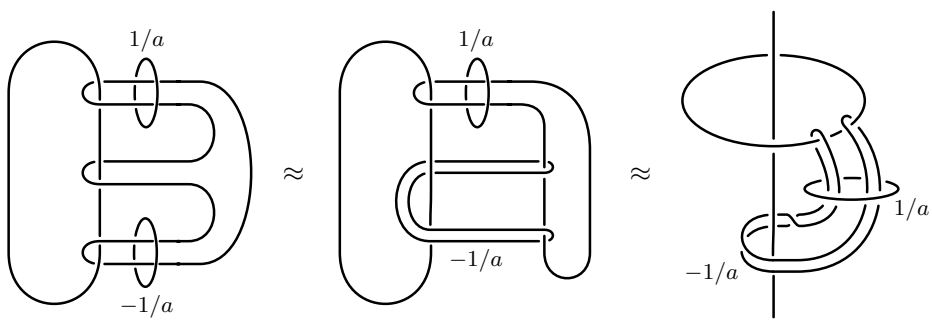

FIGURE 3. A surgery presentation of the seed link.

The first homology of the universal abelian cover of E_{L_0} has two generators, namely the meridians of surgery curves u and v in Figure 5, as a module over $\mathbb{Z}[x^{\pm1},y^{\pm1}]$. The defining relations given by the surgery are read from the linking numbers of the various translations $x^iy^j(u)$, $x^iy^j(v)$ with the $(1/a)$-curve and $((2a-1)/a)$-curve on the boundary of the tubular neighborhood of u and v. From this we obtain a presentation matrix

$$\begin{bmatrix} -1 & a(x+y^{-1}-xy^{-1}-1) \\ a(x^{-1}+y-x^{-1}y-1) & a(x+x^{-1}+y+y^{-1}-xy^{-1}-x^{-1}y-2)+1 \end{bmatrix}$$

of $H_1(E_{L_0};\mathbb{Z}[x^{\pm1},y^{\pm1}])$, with respect to the meridians μ_u and μ_v of the curves u and v. Here the first and second rows correspond to the $(1/a)$-curve and $((2a-1)/a)$-curve of u and v respectively, and the first and second columns correspond to u and v. For example, the $(1,2)$-entry is equal to $\sum_{i,j}\operatorname{lk}\big(x^iy^j(v),((1/a)\text{-curve around } u)\big)x^iy^j$.

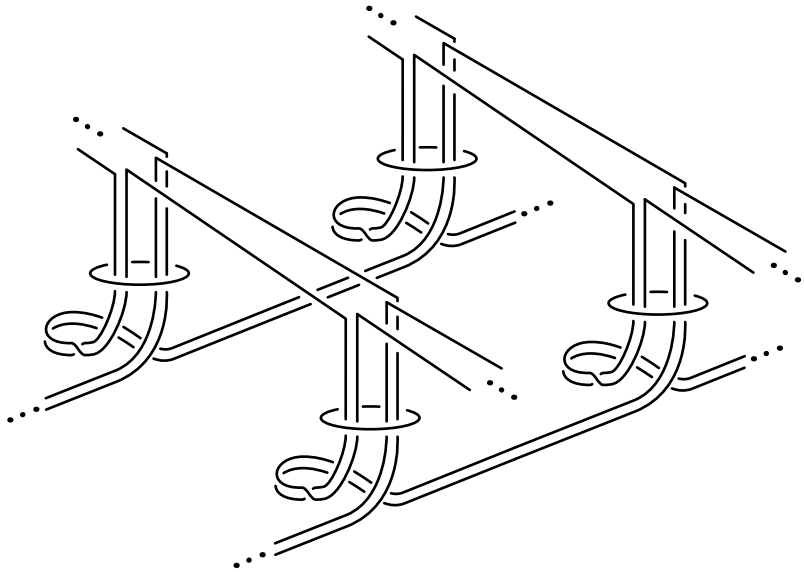

FIGURE 4. The universal abelian cover of the seed link exterior.

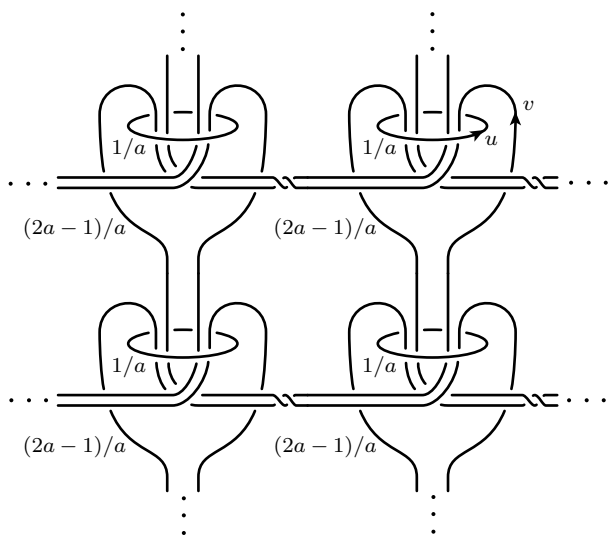

FIGURE 5. Another diagram of the universal abelian cover.

It follows that $H_1(E_{L_0};\mathbb{Z}[x^{\pm1},y^{\pm1}]) \cong \mathbb{Z}[x^{\pm1},y^{\pm1}]/\langle f\overline{f}\rangle$, generated by μ_v. Since the curve η in Figure 2 is isotopic to (the zero-linking longitude of) the projection of v, $a\cdot[\eta]$ is equal to μ_v in $H_1(E_{L_0};\mathbb{Z}[x^{\pm1},y^{\pm1}])$. It follows that $[\eta]$ is a generator. $\square$

Seed knots. Another building block is a knot satellite configuration as in Lemma 4.5 stated below.

Lemma 4.5. *There exist satellite configurations (K, α) of height one with K a slice knot such that the Alexander module $H_1(E_K; \mathbb{Z}[t^{\pm 1}])$ of K is nonzero and generated by the homology class of α.*

It is folklore that such (K, α) is not rare. For example, [Cha07, Theorem 5.18] gives a construction of a ribbon knot with Alexander module $\mathbb{Z}[t^{\pm 1}]/\langle P(t)^2 \rangle$ for any polynomial $P(t)$ with integral coefficients satisfying $P(1) = \pm 1$ and $P(t^{-1}) = P(t)$ up to multiplication by $\pm t^r$, and for this knot it is not difficult to see that there is a curve α with the desired property. As an explicit example, straightforward computation shows that Stevedore's knot K with the curve α illustrated in Figure 6 satisfies Lemma 4.5.

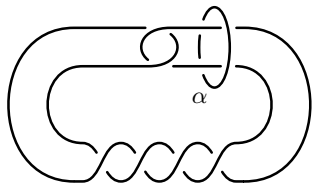

FIGURE 6. Stevedore's knot with a curve α bounding a grope of height one.

Cochran-Teichner knot. Let J be the knot given by Cochran and Teichner in [CT07, Figure 3.6]. We need the following nice properties of J.

Lemma 4.6 ([CT07]). (1) *$\int_{S^1} \sigma_J(\omega)\, d\omega \neq 0$, where σ_J is the Levine-Tristram signature function of J.*

(2) *For any connected sum J_0 of copies of J, if (L, η) is a satellite configuration of height n, then $L(\eta, J_0)$ is height $n+2$ grope concordant to L.*

We note that by applying (2) to $(L, \eta) = (\text{unknot}, \text{meridian})$, $J = L(\eta, J)$ bounds a height 2 grope in D^4.

Proof. (1) is [CT07, Lemma 4.5]. (2) is an immediate consequence of (a link version of) [CT07, Corollary 3.14]. □

4.3. **Construction of examples.** In the remaining part of this section we assume the following:

(C1) (L_0, η) is a satellite configuration satisfying Lemma 4.4, e.g., the seed link in Figure 2.

(C2) $(K_0, \alpha_0), \ldots, (K_{n-2}, \alpha_{n-2})$ are satellite configurations satisfying Lemma 4.5, e.g., the Stevedore configuration in Figure 6.

(C3) J_0 is a connected sum of copies of a knot satisfying Lemma 4.6.

We define a two-component L by an iterated satellite construction as follows: let $J_k = K_{k-1}(\alpha_{k-1}, J_{k-1})$ for $k = 1, \ldots, n-1$ inductively. Define $L = L_0(\eta, J_{n-1})$.

The link L can be described alternatively, by reversing the order of the satellite constructions: define $L_1 = L_0(\eta, K_{n-2})$ and $L_k = L_{k-1}(\alpha_{n-k}, K_{n-k-1})$ for $k = 2, \ldots, n-1$. Note that as in Proposition 4.3, α_{n-k} can be viewed as a curve in $E_{K_{n-k}} \subset E_{L_{k-1}}$ so that the inductive definition makes sense. Finally let $L_n = L_{n-1}(\alpha_0, J)$. Then the link L_n is exactly our L defined above.

We note that since the curves η and α_k are in the commutator subgroup of $\pi_1(E_{L_0})$ and $\pi_1(E_{K_k})$ respectively, an induction shows that the top level curve α_0 lies in the nth derived subgroup $\pi_1(E_{L_{n-1}})^{(n)}$.

Observe that if (L_0, η) is the one given in Figure 2, then each component of L_n is unknotted since the union of η and any one of the two components of L_0 is a trivial link.

Proposition 4.7. *The link L is height $n+2$ grope concordant to the Hopf link.*

Proof. Note that (L_{n-1}, α_0) is a satellite configuration of height n by Proposition 4.3 applied inductively. Therefore it follows that our $L = L_n$ is height $n+2$ grope concordant to L_{n-1} by Lemma 4.6. Recall that for a link R and a curve $\beta \subset S^3 - R$, $R(\beta, J)$ is concordant to $R(\beta, J')$ if J is concordant to J'; a concordance is obtained by filling in $(S^3 - \nu(\beta), R) \times [0,1]$ with the exterior of a concordance between J and J'. Applying this inductively to our second description of the links L_i, it follows that L_{n-1} is concordant to L_0 since each K_i is slice. Consequently L_{n-1} is concordant to the Hopf link by Lemma 4.4. □

4.4. **Proof of the nonexistence of Whitney tower concordance.** The remaining part of this section is devoted to the proof of the following. From now on H denotes the Hopf link, and L denotes our link constructed above.

Theorem 4.8. *The exterior E_L of L is not $n.5$-solvably cobordant to the Hopf link exterior E_H.*

By Corollary 2.17, it follows that our L is not height $n+2.5$ grope (nor Whitney tower) concordant to the Hopf link. This completes the proof of Theorem 4.1.

In the proof of Theorem 4.8, we combine our Amenable Signature Theorem 3.2 with a construction of 4-dimensional cobordisms and a higher order Blanchfield pairing argument, in the same way as was done in [Cha, Section 4.3]. This is modeled on (but technically simpler than) an earlier argument due to Cochran, Harvey, and Leidy, which appeared in [CHL09].

Cobordism associated to an iterated satellite construction. Suppose W is an $n.5$-solvable cobordism between E_L and E_H. We recall that associated to a satellite construction applied to a framed circle η in a 3-manifold Y using a knot J, there is a standard cobordism from $M(J) \cup Y$ to $Y(\eta, J)$, namely $(M(J) \times [0,1] \cup Y \times [0,1])/\sim$, where the tubular neighborhood of $\eta \subset Y \times 0$ is identified with the solid tori $(M(J) - \operatorname{int} E_L) \times 0$ [CHL09, p. 1429]. In particular our satellite construction gives a standard cobordism E_k from $M(J_k) \cup M(K_k)$ to $M(J_{k+1})$ for $k = 0, \dots, n-2$, and E_{n-1} from $M(J_{n-1}) \cup (E_{L_0} \cup_\partial E_H)$ to $E_L \cup_\partial E_H$. Define $W_n = W$, and for $k = n-1, n-2, \dots, 0$, define W_k by

$$\begin{aligned} W_k &= E_k \coprod_{M(J_{k+1})} E_{k+1} \coprod_{M(J_{k+2})} \cdots \coprod_{M(J_{n-1})} E_{n-1} \coprod_{E_L \cup_\partial E_H} W_n \\ &= E_k \coprod_{M(J_{k+1})} W_{k+1}. \end{aligned}$$

Note that $\partial W_n = E_L \cup_\partial E_H$ and $\partial W_k = M(J_k) \cup M(K_k) \cup M(K_{k+1}) \cup \cdots \cup M(K_{n-2}) \cup (E_{L_0} \cup_\partial E_H)$ for $k < n$.

Representations on mixed-type commutator quotients. To construct solvable representations to which we apply Amenable Signature Theorem 3.2, we use the mixed-coefficient commutator series $\{\mathcal{P}^k\pi\}$ as in [Cha, Section 4.1] and [CO, Section 3.1]. For the reader's convenience we repeat the definition: for a group π and sequence $\mathcal{P} = (R_0, \dots, R_n)$ where each R_k is a commutative ring with unity, $\mathcal{P}^k\pi$ is defined inductively by $\mathcal{P}^0\pi := \pi$ and

$$\mathcal{P}^{k+1}\pi := \operatorname{Ker}\Big\{\mathcal{P}^k\pi \longrightarrow \frac{\mathcal{P}^k\pi}{[\mathcal{P}^k\pi, \mathcal{P}^k\pi]} \longrightarrow \frac{\mathcal{P}^k\pi}{[\mathcal{P}^k\pi, \mathcal{P}^k\pi]} \underset{\mathbb{Z}}{\otimes} R_k\Big\}.$$

Here we state the following facts, which are easily verified from the definition. Suppose $\mathcal{P} = (R_0, \dots, R_n)$, where $R_k = \mathbb{Q}$ for $k < n$ and $R_n = \mathbb{Q}$ or $\mathbb{Z}/p$ for p a fixed prime. Then for $k \le n$, $\mathcal{P}^k\pi$ is the kth rational derived subgroup. In particular $\pi/\mathcal{P}^k\pi$ is PTFA for $k \le n$. We have $\pi^{(k)} \subset \mathcal{P}^k\pi$, and consequently for $G = \pi/\mathcal{P}^{n+1}\pi$, $G^{(n+1)} = \{e\}$. Also, by [Cha, Lemma 4.3], G is amenable and in $D(R_n)$.

For W_0 defined above, we have the following:

A special case of Theorem 4.10. *The projection*

$$\phi_0 \colon \pi_1(W_0) \longrightarrow G := \pi_1(W_0)/\mathcal{P}^{n+1}\pi_1(W_0)$$

sends the meridian of J_0 that lies in $M(J_0) \subset \partial W_0$ to an element in the abelian subgroup $\mathcal{P}^n\pi_1(W_0)/\mathcal{P}^{n+1}\pi_1(W_0)$ which has order ∞ if $R_n = \mathbb{Q}$, and has order p if $R_n = \mathbb{Z}/p$.

Its proof is deferred to Section 4.5.

Application of Amenable Signature Theorem. As an abuse of notation, we denote by ϕ_0 various homomorphisms induced by ϕ_0 (e.g., the restrictions of ϕ_0 on $\pi_1(M(J_0))$, $\pi_1(E_{L_0} \cup_\partial E_H)$, and $\pi_1(M(K_k))$). For a 4-manifold X over G, we denote the L^2-signature defect by $S_G(X) := \operatorname{sign}^{(2)}_G(X) - \operatorname{sign}(X)$. Then, the $\rho^{(2)}$-invariant of ∂W_0 is given by

$$\begin{aligned}\rho^{(2)}(M(J_0), \phi_0) + \rho^{(2)}(E_{L_0} \cup_\partial E_H, \phi_0) + \sum_{k=0}^{n-2} \rho^{(2)}(M(K_k), \phi_0) \\ = \rho^{(2)}(\partial W, \phi_0) = S_G(W_n) + \sum_{k=0}^{n-1} S_G(E_k).\end{aligned}$$

Recall that W_n is assumed to be an $n.5$-solvable cobordism between E_H and E_L. Since the abelianization $\pi_1(W_n) \to \mathbb{Z}^2$ decomposes as $\pi_1(W_1) \xrightarrow{\phi_0} G \to G/G^{(1)} = \mathbb{Z}^2$, we have $b_1^{(2)}(E_H; \mathcal{N}G) = 0$ by Theorem 3.7. Therefore, by applying our Amenable Signature Theorem 3.2 (I), we obtain

$$\rho^{(2)}(E_L \cup E_H, \phi_0) = S_G(W_n) = 0.$$

Also, according to [CHL09, Lemma 2.4], $S_G(E_k) = 0$ for each k. It follows that

$$\rho^{(2)}(M(J_0), \phi_0) = -\rho^{(2)}(E_{L_0} \cup_\partial E_H, \phi_0) - \sum_{k=0}^{n-2} \rho^{(2)}(M(K_k), \phi_0).$$

Due to Cheeger and Gromov [CG85, p. 23] (see also the discussion of [CT07, Theorem 2.9]), for any closed 3-manifold M there is a bound C_M such that $|\rho^{(2)}(M,\phi)| \leq C_M$ for any homomorphism ϕ of $\pi_1(M)$. Therefore, if

$$\left|\rho^{(2)}(M(J_0),\phi_0)\right| > C_{E_{L_0}\cup_\partial E_H} + \sum_{k=0}^{n-2} C_{M(K_k)},$$

then we derive a contradiction. That is, E_L and E_H are not $n.5$-solvably cobordant.

The invariant $\rho^{(2)}(M(J_0),\phi_0)$ can be given explicitly as follows. By Theorem 4.10, the map ϕ_0 restricted on $\pi_1(M(J_0))$ has image $\mathbb{Z}$ if $R_n = \mathbb{Q}$, and $\mathbb{Z}/p$ if $R_n = \mathbb{Z}/p$. Therefore by the L^2-induction property and known computation of the abelian $\rho^{(2)}$-invariant of a knot (e.g., see [COT04, Proposition 5.1], [Fri05b, Corollary 4.3], [CO12, Lemma 8.7]), we have

$$\rho^{(2)}(M(J_0),\alpha) = \begin{cases} \int_{S^1} \sigma_{J_0}(w)\,dw & \text{if } R_n = \mathbb{Q}, \\ \sum_{k=0}^{p-1} \sigma_{J_0}(e^{2\pi k\sqrt{-1}/p}) & \text{if } R_n = \mathbb{Z}/p, \end{cases}$$

where $\sigma_{J_0}(\omega)$ is the Levine-Tristram signature function of J_0. Combining all these, we have proven the following:

Theorem 4.9. *Suppose (L_0,η), (K_k,α_k) are fixed and satisfy* (C1), (C2) *at the beginning of Section* 4.3. *If either $\int \sigma_{J_0}(w)\,dw$ or $\sum_{k=0}^{p-1}\sigma_{J_0}(e^{2\pi k\sqrt{-1}/p})$, for some prime p, is sufficiently large, then for our link L, the exterior E_L is not $n.5$-solvably cobordant to E_H. Consequently L is not height $n+2.5$ Whitney tower concordant and not height $n+2.5$ grope concordant to the Hopf link.*

The last conclusion follows from the first conclusion by applying Corollary 2.17.

In particular, since the Cochran-Teichner knot J satisfies Lemma 4.6, if we take as J_0 the connected sum of sufficiently many copies of J, then by Theorem 4.9 our L is not height $n+2.5$ Whitney tower concordant (and so not height $n+2.5$ grope concordant) to the Hopf link. On the other hand, by Proposition 4.3 and Lemma 4.6 (2), L is height $n+2$ grope concordant (and so height $n+2$ Whitney tower concordant) to the Hopf link. This proves Theorem 4.1, modulo the proof of Theorem 4.10, which is given next.

4.5. **Blanchfield bordism and nontriviality of solvable representations.** We will complete the proof of Theorem 4.1 by proving the following nontriviality result:

Theorem 4.10 (cf. [CHL09, Proposition 8.2], [Cha, Theorem 4.14])**.** *For each $k = 0,1,\dots,n-1$, the projection $\phi_k\colon \pi_1(W_k) \to \pi_1(W_k)/\mathcal{P}^{n-k+1}\pi_1(W_k)$ sends a meridian $\mu_k \subset M(J_k) \subset \partial W$ of J_k into the abelian subgroup $\mathcal{P}^{n-k}\pi_1(W_k)/\mathcal{P}^{n-k+1}\pi_1(W_k)$. Furthermore, $\phi_k(\mu_k)$ has order p if $R_n = \mathbb{Z}/p$ and $k=0$, and has order ∞ otherwise.*

We remark that although we use only the case of $k=0$ in the proof of Theorem 4.1, we state it in this generality since we need an induction argument for $k = n-1,\dots,0$ in its proof.

Our proof of Theorem 4.10 is a variation of the higher order Blanchfield pairing technique which was first introduced by Cochran, Harvey, and Leidy, but different from arguments in earlier papers (e.g., [CHL09], [CHL08], [Cha]) as discussed below.

The notion of certain 4-manifolds called *n-bordisms* [CHL09, Definition 5.1] plays an important role in understanding the behavior of solvable coefficient systems in earlier works. Its key property is that if a certain rank condition is satisfied (see, e.g., [CHL09, Theorem 5.9, Lemma 5.10]), an n-bordism gives a submodule that annihilates itself under the higher order Blanchfield pairing of the boundary, generalizing the fact that the classical Blanchfield pairing of a slice knot is Witt trivial. This is an essential ingredient used in several papers to investigate higher order coefficient systems. For example see [CHL09, CHL08, Hor10, Cha].

Generalizing this, we consider a 4-dimensional bordism that we call a *Blanchfield bordism*. Indeed for our purpose we need to use Blanchfield bordisms to which prior results of Cochran-Harvey-Leidy [CHL09, Theorem 5.9, Lemma 5.10] for n-bordisms do not apply.

Blanchfield bordism. Throughout this section, $R = \mathbb{Z}/p$ or a subring of $\mathbb{Q}$, and G is assumed to be a group whose group ring RG is an Ore domain. Our standard example to keep in mind is the case of a PTFA group G (see [COT03, Proposition 2.5] and [Cha, Lemma 5.2]). We denote the skew-field of quotients of RG by $\mathcal{K}G$. For a module M over an Ore domain, denote the torsion submodule of M by tM.

Definition 4.11. Suppose W is a 4-manifold with boundary and $\phi\colon \pi_1(W) \to G$ is a homomorphism. We call (W, ϕ) a *Blanchfield bordism* if the following is exact:

$$tH_2(W, \partial W; RG) \longrightarrow tH_1(\partial W; RG) \longrightarrow tH_1(W; RG).$$

When the choice of R is not clearly understood, we call (W, ϕ) an R-coefficient Blanchfield bordism.

The key property of a Blanchfield bordism is the following. For a 3-manifold M endowed with $\phi\colon \pi_1(M) \to G$ and a subring $\mathcal{R}$ of $\mathcal{K}G$ containing RG, there is the Blanchfield pairing

$$B\ell_M\colon tH_1(M; \mathcal{R}) \times tH_1(M; \mathcal{R}) \longrightarrow \mathcal{K}G/\mathcal{R}$$

defined as in [COT03, Theorem 2.13], Then, the following is shown by known arguments (see, e.g., [Hil02, Proof of Theorem 2.3], [COT03, Proof of Theorem 4.4]). We omit details of its proof.

Theorem 4.12. *If $(W, \phi\colon \pi_1(W) \to G)$ is a Blanchfield bordism and $RG \subset \mathcal{R} \subset \mathcal{K}G$, then for any 3-manifold $M \subset \partial W$,*

$$P := \operatorname{Ker}\{tH_1(M; \mathcal{R}) \longrightarrow tH_1(W; \mathcal{R})\}$$

satisfies $B\ell_M(P, P) = 0$, namely P annihilates P itself.

As an example, if W is an n-bordism in the sense of [CHL09, Definition 5.1], then for $\phi\colon \pi_1(W) \to G$ satisfying $G^{(n)} = \{e\}$ and $\dim_{\mathcal{K}G} H_1(M; \mathcal{K}G) = b_1(M) - 1$ for each component M of ∂W, (W, ϕ) is an integral Blanchfield bordism by [CHL09, Lemma 5.10].

The following observation provides new examples of Blanchfield bordisms.

Theorem 4.13. *Suppose W is a 4-manifold with boundary, $\phi\colon \pi_1(W) \to G$, and there are $\ell_1, \dots, \ell_m, d_1, \dots, d_m$ in $H_2(W; RG)$ satisfying $\lambda_G(\ell_i, \ell_j) = 0$ and $\lambda_G(\ell_i, d_j) = \delta_{ij}$, where λ_G is the $\mathbb{Z}G$-valued intersection pairing on $H_2(W; RG)$. If $\operatorname{rank}_R H_2(W, M; R) \le 2m$ for some $M \subset \partial W$, then (W, ϕ) is a Blanchfield bordism.*

An immediate consequence of Theorem 4.13 is the following:

Corollary 4.14. *If W is an n-solvable cobordism between bordered 3-manifolds M and M', then for any $\phi\colon \pi_1(W) \to G$ with $G^{(n)} = \{e\}$, (W, ϕ) is an R-coefficient Blanchfield bordism for $R = \mathbb{Z}/p$ or any subring of $\mathbb{Q}$.*

Proof of Theorem 4.13. We claim:

$$\begin{aligned} 2m \geq \operatorname{rank}_R H_2(W, M; R) &\geq \dim_{\mathcal{K}G} H_2(W, M; \mathcal{K}G) \\ &\geq \dim_{\mathcal{K}G} \operatorname{Coker}\{H_2(\partial W; \mathcal{K}G) \to H_2(W; \mathcal{K}G)\}. \end{aligned}$$

By applying [CH08, Corollary 2.8] (or its $\mathbb{Z}/p$-analogue if $R = \mathbb{Z}/p$) to the chain complex $C_*(W, M; RG)$, we obtain the second inequality. Next, $H_2(W, M; \mathcal{K}G)$ has the submodule $\operatorname{Coker}\{H_2(M; \mathcal{K}G) \to H_2(W; \mathcal{K}G)\}$ which surjects onto $\operatorname{Coker}\{H_2(\partial W; \mathcal{K}G) \to H_2(W; \mathcal{K}G)\}$. From this the third inequality follows.

Now the proof is completed by the following fact stated as Lemma 4.15 below, which is proven by known arguments due to Cochran-Orr-Teichner (see the proof of [COT03, Lemma 4.5]; see also [CHL09, Lemma 5.10]). □

Lemma 4.15 ([COT03, CHL09])**.** *If there are $\ell_1, \dots, \ell_m, d_1, \dots, d_m$ as in Theorem* 4.13 *and the cokernel of $H_2(\partial W; \mathcal{K}G) \to H_2(W; \mathcal{K}G)$ has $\mathcal{K}G$-dimension $\leq 2m$, then (W, ϕ) is a Blanchfield bordism (and the equality holds).*

Remark 4.16. From the above proof, we also see that in Corollary 4.14 the cokernel of $H_2(\partial W; \mathcal{K}G) \to H_2(W; \mathcal{K}G)$ has the "right" dimension, namely $b_2(W, M)$.

Proof of Theorem 4.10. Recall the conclusion of Theorem 4.10: the projection

$$\phi_k\colon \pi_1(W_k) \longrightarrow \pi_1(W_k)/\mathcal{P}^{n-k+1}\pi_1(W_k)$$

sends the meridian $\mu_k \subset M(J_k) \subset \partial W$ to an element in $\mathcal{P}^{n-k}\pi_1(W_k)/\mathcal{P}^{n-k+1}\pi_1(W_k)$, which has order ∞ if $k \neq 0$ or $R_n = \mathbb{Q}$, p otherwise. In fact it suffices to show the nontriviality of

$$\phi_k(\mu_k) \in \mathcal{P}^{n-k}\pi_1(W_k)/\mathcal{P}^{n-k+1}\pi_1(W_k),$$

since $\mathcal{P}^{n-k}\pi_1(W_k)/\mathcal{P}^{n-k+1}\pi_1(W_k)$ is a torsion free abelian group (if $k \neq 0$ or $R_n = \mathbb{Q}$) or a vector space over $\mathbb{Z}/p$ (otherwise).

We use an induction on $k = n-1, n-2, \dots, 0$. For the case $k = n-1$, we start by considering $\phi_n\colon \pi_1(W_n) \to G := \pi_1(W_n)/\mathcal{P}^1\pi_1(W_n)$. Recall $G \cong H_1(W_n)/\text{torsion} = \mathbb{Z}^2$. Let $R = R_1$ and $A = H_1(E_L; RG) \cong H_1(E_{L_0}; R[x^{\pm 1}, y^{\pm 1}])$, the Alexander module.

We need the fact that (A is torsion and) the Blanchfield pairing $B\ell_L = B\ell_{L_0}$ on A is nondegenerate. This is a general fact for linking number one two-component links due to Levine [Lev82], or can be seen by straightforward computation in our case.

Recall that we use the curve $\eta \subset E_{L_0}$ in the satellite construction. Denote a parallel copy of η in E_L by η as an abuse of notation. $B\ell_L(\eta, \eta)$ is nonzero, since $[\eta]$ generates the nontrivial torsion module A by Lemma 4.4 and $B\ell_L$ on A is nondegenerate. Therefore $[\eta] \notin P = \operatorname{Ker}\{A \to H_1(W_n; RG)\}$, since $P \subset P^\perp$ by Theorem 4.12. Since $\mathcal{P}^2\pi_1(W_n)$ is the kernel of $\mathcal{P}^1\pi_1(W_n) \to H_1(W_n; RG)$ by definition (see [Cha, Section 4.1]), it follows that $[\eta] \notin \mathcal{P}^2\pi_1(W_n)$. As in [Cha, Assertion 1 in Section 5.2], we have

$$\mathcal{P}^{n-k}\pi_1(W_k)/\mathcal{P}^{n-k+1}\pi_1(W_k) \cong \mathcal{P}^{n-k}\pi_1(W_{k+1})/\mathcal{P}^{n-k+1}\pi_1(W_{k+1}).$$

Looking at the $k = n-1$ case and observing that η is isotopic to $\mu_{n-1} \subset M(J_{n-1})$ in W_{n-1}, it follows that $[\mu_{n-1}]$ is nontrivial in $\mathcal{P}^1\pi_1(W_{k+1})/\mathcal{P}^2\pi_1(W_{k+1})$. This is the desired conclusion for $k = n-1$.

Now we assume that the conclusion is true for all $i > k$. Let $G = \pi_1(W_{k+1})/\mathcal{P}^{n-k}\pi_1(W_{k+1})$, $R = R_{n-k}$, and $A = H_1(M(J_{k+1}); RG)$ for convenience.

We claim that $(W_{k+1}, \phi_{k+1}\colon \pi_1(W_{k+1}) \to G)$ is an R-coefficient Blanchfield bordism. To show this we need the following lemma:

Lemma 4.17. *Suppose W is a 4-manifold with a boundary component $N' = N(\eta, J)$ obtained by a satellite construction. Let E be the associated standard cobordism from $M(J) \cup N$ to N', and let $V = W \cup_{N'} E$. If $\phi\colon \pi_1(V) \to G$ sends $[\eta]$ to a nontrivial element, then the inclusion $W \to V$ induces*

$$\mathrm{Coker}\{H_2(\partial V; \mathcal{K}G) \to H_2(V; \mathcal{K}G)\} \cong \mathrm{Coker}\{H_2(\partial W; \mathcal{K}G) \to H_2(W; \mathcal{K}G)\}.$$

Proof. The proof is a straightforward Mayer-Vietoris argument. We give an outline below. The cobordism E is defined to be $M(J) \times [0,1] \cup N \times [0,1]/\sim$, where the solid torus $U := \overline{M(J) - E_J} \cong S^1 \times D^2$ in $M(J) = M(J) \times 1$ is identified with a tubular neighborhood of $\eta \subset N = N \times 1$. Applying Mayer-Vietoris to this, one sees that $H_i(N; \mathcal{K}G) \cong H_i(E; \mathcal{K}G)$ for $i = 1, 2$. Here one needs that $H_1(U; \mathcal{K}G) = H_1(M(J); \mathcal{K}G) = 0$, which are consequences of $\phi([\eta]) \neq e$ by [COT03, Proposition 2.11]. Similarly one sees that $H_i(N'; \mathcal{K}G) \cong H_i(E; \mathcal{K}G)$ for $i = 1, 2$. This says that the cobordism E looks like a cylinder to the eyes of $H_i(-; \mathcal{K}G)$ for $i = 1, 2$. Applying Mayer-Vietoris to $V = W \cup_{N'} E$, the desired conclusion follows. □

Returning to the case of our W_{k+1}, the induction hypothesis $\phi_\ell([\mu_\ell]) \neq e$ for $\ell \geq k+1$ enables us to repeatedly apply the lemma above. From this we obtain

$$\mathrm{Coker}\{H_2(\partial W_{k+1}; \mathcal{K}G) \to H_2(W_{k+1}; \mathcal{K}G)\} \cong \mathrm{Coker}\{H_2(\partial W_n; \mathcal{K}G) \to H_2(W_n; \mathcal{K}G)\}.$$

By Corollary 4.14, Remark 4.16 and Lemma 4.15, it follows that (W_{k+1}, ϕ_{k+1}) is a Blanchfield bordism.

Now we proceed similarly to the $k = n-1$ case. We need the following fact which is due to [Lei06, Theorem 4.7], [Cha07, Theorem 5.16], [CHL09, Lemma 6.5, Theorem 6.6] (see also [Cha, Theorem 5.4] for a summarized version):

$$A \cong H_1(M(K_k); RG) \cong RG \otimes_{R[t^{\pm 1}]} H_1(M(K_k); R[t^{\pm 1}]),$$

and the classical Blanchfield pairing on $H_1(M(K_k); R[t^{\pm 1}])$ vanishes at (x, y) if the Blanchfield pairing $B\ell$ on A vanishes at $(1 \otimes x, 1 \otimes y)$. Using this, one sees that $B\ell(1 \otimes [\alpha_k], 1 \otimes [\alpha_k]) \neq 0$, since $[\alpha_k]$ generates the nontrivial module $H_1(M(K_k); RG)$ by Lemma 4.5, and the classical Blanchfield pairing of a knot is nonsingular. Therefore $[\alpha_k] \notin P = \mathrm{Ker}\{A \to H_1(W_{k+1}; RG)\}$ by Theorem 4.12 applied to the Blanchfield bordism (W_{k+1}, ϕ_{k+1}). Finally, proceeding in exactly the same way as the last part of the $k = n-1$ case, we conclude that $[\mu_k]$ is nontrivial in $\mathcal{P}^{n-k}\pi_1(W_k)/\mathcal{P}^{n-k+1}\pi_1(W_k)$. This completes the proof of Theorem 4.10. □

Acknowledgements

The exposition of the paper was significantly improved by detailed comments of an anonymous referee. This research was supported in part by NRF grants 2011–0030044, 2010–0029638, 2010–0011629 funded by the government of Korea.

References

[CF] Jae Choon Cha and Stefan Friedl, *Twisted torsion invariants and link concordance*, Forum Math. **25** (2013), no. 3, 471–504. MR3062861

[CG85] Jeff Cheeger and Mikhael Gromov, *Bounds on the von Neumann dimension of L^2-cohomology and the Gauss-Bonnet theorem for open manifolds*, J. Differential Geom. **21** (1985), no. 1, 1–34. MR806699 (87d:58136)

[CH05] Tim Cochran and Shelly Harvey, *Homology and derived series of groups*, Geom. Topol. **9** (2005), 2159–2191 (electronic), DOI 10.2140/gt.2005.9.2159. MR2209369 (2007c:20120)

[CH08] Tim Cochran and Shelly Harvey, *Homology and derived series of groups. II. Dwyer's theorem*, Geom. Topol. **12** (2008), no. 1, 199–232. MR2377249

[Cha] Jae Choon Cha, *Amenable L^2-theoretic methods and knot concordance*, arXiv:1010.1058, to appear in Int. Math. Res. Not. IMRN

[Cha07] Jae Choon Cha, *The structure of the rational concordance group of knots*, Mem. Amer. Math. Soc. **189** (2007), no. 885, x+95. MR2343079 (2009c:57007)

[Cha08] Jae Choon Cha, *Topological minimal genus and L^2-signatures*, Algebr. Geom. Topol. **8** (2008), no. 2, 885–909, DOI 10.2140/agt.2008.8.885. MR2443100 (2010f:57024)

[Cha09] Jae Choon Cha, *Structure of the string link concordance group and Hirzebruch-type invariants*, Indiana Univ. Math. J. **58** (2009), no. 2, 891–927, DOI 10.1512/iumj.2009.58.3520. MR2514393 (2010j:57012)

[Cha10] Jae Choon Cha, *Link concordance, homology cobordism, and Hirzebruch-type defects from iterated p-covers*, J. Eur. Math. Soc. (JEMS) **12** (2010), no. 3, 555–610, DOI 10.4171/JEMS/209. MR2639313 (2011f:57003)

[CHL08] Tim Cochran, Shelly Harvey, and Constance Leidy, *Link concordance and generalized doubling operators*, Algebr. Geom. Topol. **8** (2008), no. 3, 1593–1646, DOI 10.2140/agt.2008.8.1593. MR2443256 (2009h:57014)

[CHL09] Tim D. Cochran, Shelly Harvey, and Constance Leidy, *Knot concordance and higher-order Blanchfield duality*, Geom. Topol. **13** (2009), no. 3, 1419–1482, DOI 10.2140/gt.2009.13.1419. MR2496049 (2009m:57006)

[CK99a] Jae Choon Cha and Ki Hyoung Ko, *On equivariant slice knots*, Proc. Amer. Math. Soc. **127** (1999), no. 7, 2175–2182, DOI 10.1090/S0002-9939-99-04868-6. MR1605928 (2000a:57006)

[CK99b] Jae Choon Cha and Ki Hyoung Ko, *Signature invariants of links from irregular covers and non-abelian covers*, Math. Proc. Cambridge Philos. Soc. **127** (1999), no. 1, 67–81, DOI 10.1017/S0305004199003606. MR1692511 (2000d:57014)

[CK08a] Jae Choon Cha and Taehee Kim, *Covering link calculus and iterated Bing doubles*, Geom. Topol. **12** (2008), no. 4, 2173–2201, DOI 10.2140/gt.2008.12.2173. MR2431018 (2009f:57007)

[CK08b] Tim D. Cochran and Taehee Kim, *Higher-order Alexander invariants and filtrations of the knot concordance group*, Trans. Amer. Math. Soc. **360** (2008), no. 3, 1407–1441 (electronic), DOI 10.1090/S0002-9947-07-04177-3. MR2357701 (2008m:57008)

[CKRS12] Jae Choon Cha, Taehee Kim, Daniel Ruberman, and Sašo Strle, *Smooth concordance of links topologically concordant to the Hopf link*, Bull. Lond. Math. Soc. **44** (2012), no. 3, 443–450, DOI 10.1112/blms/bdr103. MR2966989

[CLR08] Jae Choon Cha, Charles Livingston, and Daniel Ruberman, *Algebraic and Heegaard-Floer invariants of knots with slice Bing doubles*, Math. Proc. Cambridge Philos. Soc. **144** (2008), no. 2, 403–410, DOI 10.1017/S0305004107000795. MR2405897 (2009h:57013)

[CO] Jae Choon Cha and Kent E. Orr, *Hidden torsion, 3-manifolds, and homology cobordism*, J. Topol. **6** (2013), no. 2. 490–512. MR3065182

[CO93] Tim D. Cochran and Kent E. Orr, *Not all links are concordant to boundary links*, Ann. of Math. (2) **138** (1993), no. 3, 519–554, DOI 10.2307/2946555. MR1247992 (95c:57042)

[CO12] Jae Choon Cha and Kent E. Orr, *L^2-signatures, homology localization, and amenable groups*, Comm. Pure Appl. Math. **65** (2012), no. 6, 790–832, DOI 10.1002/cpa.21393. MR2903800

[COT03] Tim D. Cochran, Kent E. Orr, and Peter Teichner, *Knot concordance, Whitney towers and L^2-signatures*, Ann. of Math. (2) **157** (2003), no. 2, 433–519, DOI 10.4007/annals.2003.157.433. MR1973052 (2004i:57003)

[COT04] Tim D. Cochran, Kent E. Orr, and Peter Teichner, *Structure in the classical knot concordance group*, Comment. Math. Helv. **79** (2004), no. 1, 105–123, DOI 10.1007/s00014-001-0793-6. MR2031301 (2004k:57005)

[CS74] Sylvain E. Cappell and Julius L. Shaneson, *The codimension two placement problem and homology equivalent manifolds*, Ann. of Math. (2) **99** (1974), 277–348. MR0339216 (49 #3978)

[CST11] Jim Conant, Rob Schneiderman, and Peter Teichner, *Higher-order intersections in low-dimensional topology*, Proc. Natl. Acad. Sci. USA **108** (2011), no. 20, 8131–8138, DOI 10.1073/pnas.1018581108. MR2806650 (2012e:57042)

[CST12] James Conant, Rob Schneiderman, and Peter Teichner, *Whitney tower concordance of classical links*, Geom. Topol. **16** (2012), no. 3, 1419–1479, DOI 10.2140/gt.2012.16.1419. MR2967057

[CT07] Tim D. Cochran and Peter Teichner, *Knot concordance and von Neumann ρ-invariants*, Duke Math. J. **137** (2007), no. 2, 337–379, DOI 10.1215/S0012-7094-07-13723-2. MR2309149 (2008f:57005)

[CW03] Stanley Chang and Shmuel Weinberger, *On invariants of Hirzebruch and Cheeger-Gromov*, Geom. Topol. **7** (2003), 311–319 (electronic), DOI 10.2140/gt.2003.7.311. MR1988288 (2004c:57052)

[Dav06] James F. Davis, *A two component link with Alexander polynomial one is concordant to the Hopf link*, Math. Proc. Cambridge Philos. Soc. **140** (2006), no. 2, 265–268, DOI 10.1017/S0305004105008856. MR2212279 (2006k:57010)

[FP] Stefan Friedl and Mark Powell, *Links not concordant to the hopf link*, arXiv:1105.2773.

[FP12] Stefan Friedl and Mark Powell, *An injectivity theorem for Casson-Gordon type representations relating to the concordance of knots and links*, Bull. Korean Math. Soc. **49** (2012), no. 2, 395–409, DOI 10.4134/BKMS.2012.49.2.395. MR2934490

[FQ90] Michael H. Freedman and Frank Quinn, *Topology of 4-manifolds*, Princeton Mathematical Series, vol. 39, Princeton University Press, Princeton, NJ, 1990. MR1201584 (94b:57021)

[Fre84] Michael H. Freedman, *The disk theorem for four-dimensional manifolds*, 2 (Warsaw, 1983), PWN, Warsaw, 1984, pp. 647–663. MR804721 (86m:57016)

[Fri05a] Stefan Friedl, *Link concordance, boundary link concordance and eta-invariants*, Math. Proc. Cambridge Philos. Soc. **138** (2005), no. 3, 437–460, DOI 10.1017/S0305004105008455. MR2138572 (2006c:57020)

[Fri05b] Stefan Friedl, *L^2-eta-invariants and their approximation by unitary eta-invariants*, Math. Proc. Cambridge Philos. Soc. **138** (2005), no. 2, 327–338, DOI 10.1017/S0305004104008084. MR2132174 (2006a:57014)

[Har08] Shelly L. Harvey, *Homology cobordism invariants and the Cochran-Orr-Teichner filtration of the link concordance group*, Geom. Topol. **12** (2008), no. 1, 387–430, DOI 10.2140/gt.2008.12.387. MR2390349 (2009d:57045)

[Hil02] Jonathan Hillman, *Algebraic invariants of links*, Series on Knots and Everything, vol. 32, World Scientific Publishing Co. Inc., River Edge, NJ, 2002. MR1932169 (2003k:57014)

[Hor10] Peter D. Horn, *The non-triviality of the grope filtrations of the knot and link concordance groups*, Comment. Math. Helv. **85** (2010), no. 4, 751–773, DOI 10.4171/CMH/210. MR2718138 (2012b:57016)

[Kaw78] Akio Kawauchi, *On the Alexander polynomials of cobordant links*, Osaka J. Math. **15** (1978), no. 1, 151–159. MR0488022 (58 #7599)

[Lei06] Constance Leidy, *Higher-order linking forms for knots*, Comment. Math. Helv. **81** (2006), no. 4, 755–781, DOI 10.4171/CMH/72. MR2271220 (2007g:57011)

[Lev82] J. Levine, *The module of a 2-component link*, Comment. Math. Helv. **57** (1982), no. 3, 377–399, DOI 10.1007/BF02565866. MR689070 (84h:57003)

[Lev94] J. P. Levine, *Link invariants via the eta invariant*, Comment. Math. Helv. **69** (1994), no. 1, 82–119, DOI 10.1007/BF02564475. MR1259607 (95a:57009)

[Lev07] Jerome Levine, *Concordance of boundary links*, J. Knot Theory Ramifications **16** (2007), no. 9, 1111–1120, DOI 10.1142/S0218216507005737. MR2375818 (2009c:57042)

[Lüc98] Wolfgang Lück, *Dimension theory of arbitrary modules over finite von Neumann algebras and L^2-Betti numbers. I. Foundations*, J. Reine Angew. Math. **495** (1998), 135–162, DOI 10.1515/crll.1998.015. MR1603853 (99k:58176)

[Lüc02] Wolfgang Lück, *L^2-invariants: theory and applications to geometry and K-theory*, Ergebnisse der Mathematik und ihrer Grenzgebiete. 3. Folge. A Series of Modern Surveys in Mathematics [Results in Mathematics and Related Areas. 3rd Series. A Series of Modern Surveys in Mathematics], vol. 44, Springer-Verlag, Berlin, 2002. MR1926649 (2003m:58033)

[Mur65] Kunio Murasugi, *On a certain numerical invariant of link types*, Trans. Amer. Math. Soc. **117** (1965), 387–422. MR0171275 (30 #1506)

[Sch06] Rob Schneiderman, *Whitney towers and gropes in 4-manifolds*, Trans. Amer. Math. Soc. **358** (2006), no. 10, 4251–4278 (electronic), DOI 10.1090/S0002-9947-05-03768-2. MR2231378 (2007e:57018)

[Sco05] Alexandru Scorpan, *The wild world of 4-manifolds*, American Mathematical Society, Providence, RI, 2005. MR2136212 (2006h:57018)

[Str74] Ralph Strebel, *Homological methods applied to the derived series of groups*, Comment. Math. Helv. **49** (1974), 302–332. MR0354896 (50 #7373)

[Tri69] A. G. Tristram, *Some cobordism invariants for links*, Proc. Cambridge Philos. Soc. **66** (1969), 251–264. MR0248854 (40 #2104)

Department of Mathematics, POSTECH, Pohang 790–784, Republic of Korea – and – School of Mathematics, Korea Institute for Advanced Study, Seoul 130–722, Republic of Korea

E-mail address: jccha@postech.ac.kr