PROCEEDINGS OF THE
AMERICAN MATHEMATICAL SOCIETY
Volume 36, Number 1, November 1972

SEPARATION BY CYLINDRICAL SURFACES[1]

STEVEN R. LAY

ABSTRACT. C. Carathéodory has established that two compact sets P and Q in Euclidean n-space can be strictly separated by a hyperplane if each subset of $n+1$ or fewer points of Q can be strictly separated from P by a hyperplane. In this paper it is shown that if each subset of k or fewer points of Q can be strictly separated from P by a hyperplane (where k is a fixed integer, $1 \leqq k \leqq n$), then there exists a cylinder of an appropriate sort containing P and disjoint from Q.

In 1905, C. Carathéodory [**1**] established that two compact sets P and Q in Euclidean n-space E^n can be strictly separated by a hyperplane if each subset of $n+1$ or fewer points of Q can be strictly separated from P by a hyperplane. Suppose, however, that less information is known. Specifically, suppose for a fixed integer k $(1 \leqq k \leqq n)$ that each subset of k or fewer points of Q can be strictly separated from P by a hyperplane. Then what can be said about the type of separation possible between P and Q? A partial answer to this question for the case where P consists of a single point and $k=n$ was given by Hanner and Rådström [**2**] in the following theorem.

THEOREM 1. *Let Q be a compact subset of E^n and let p be a fixed point. Suppose that for every n points of Q there exists a hyperplane strictly separating those n points from p. Then there exists a hyperplane containing p which is disjoint from Q.*

In order to generalize this result to the case where P is an arbitrary compact set, the following concept is useful.

DEFINITION 1. Let A be a nonempty compact subset of E^n and let F be a k-dimensional subspace of E^n $(0 \leqq k \leqq n)$. Then $C \equiv A+F \equiv \{a+f : a \in A \text{ and } f \in F\}$ is called the *k-cylinder generated by A and F.*

Presented to the Society, January 23, 1971 under the title *A generalized Kirchberger theorem*; received by the editors December 29, 1971.

AMS 1970 *subject classifications*. Primary 52A20, 52A35.

Key words and phrases. Separation of convex sets, cylindrical surfaces, Carathéodory theorem, Helly theorem.

[1] This paper comes from a doctoral dissertation with Professor F. A. Valentine at the University of California, Los Angeles, and was supported in part by NSF Grant GP-22518.

Notice that the 0-cylinder generated by A is precisely A. The 1-cylinder generated by A and a line through the origin is just a cylinder in the sense of the usual definition. An $(n-1)$-cylinder is a pair of parallel supporting hyperplanes and the region between them. The n-cylinder generated by A is precisely E^n.

We are now in a position to state our main result. We shall denote the convex hull of a set A in E^n by conv A.

THEOREM 2. *Let P and Q be nonempty compact subsets of E^n. Suppose for a fixed integer k $(1 \leqq k \leqq n)$ that each subset of k or fewer points of Q can be strictly separated from P by a hyperplane. Then given any k-cylinder of the form $C \equiv (\text{conv } P) + F$ there exists a $(k-1)$-cylinder of the form $D \equiv (\text{conv } P) + F_1$ such that $D \subset C$ and $D \cap Q = \varnothing$.*

It is clear that the Hanner-Rådström result is included in Theorem 2 as the special case where P is a single point and $k=n$, for then the k-cylinder generated by P is just E^n and the $(k-1)$-cylinder containing P and disjoint from Q is precisely a hyperplane. Unfortunately the approach used by Hanner and Rådström does not adapt itself to the situation where P is larger than a single point. In order to prove Theorem 2 in its full generality we recall the following definition and theorems relating to spherical convexity.

DEFINITION 2. A subset K of a spherical surface in E^n is said to be *strongly convex* if K does not contain antipodal points and if K contains, with each pair of its points, the small arc of the great circle determined by them.

THEOREM 3. *Let Ω be the unit sphere about the origin in E^n, and let $\mathscr{A} \equiv \{A_i : i \in I\}$ be a family of compact strongly convex subsets of Ω. If each n or fewer members of $\mathscr{A}$ have a point in common, then there exists a pair of antipodal points $\{y, -y\}$ in Ω such that each A_i $(i \in I)$ intersects $\{y, -y\}$.*

PROOF. See Horn [**4**].

THEOREM 4. *Let Ω be the unit sphere about the origin in E^n, and let $\mathscr{A} \equiv \{A_i : i \in I\}$ be a family of compact strongly convex subsets of Ω. If each $n+1$ or fewer members of $\mathscr{A}$ have a point in common, then there exists a point in common to all the members of $\mathscr{A}$.*

PROOF. This follows directly from Helly's theorem [**3**].

PROOF OF THEOREM 2. Letting $d(a, b) \equiv \|a-b\|$ for $a, b \in E^n$, we denote $\inf\{d(a, b) : a \in A, b \in B\}$ by $d(A, B)$ for subsets A and B of E^n. Define $\delta \equiv \inf\{d(\text{conv } T, \text{conv } P) : T$ is a subset of k or fewer points of $Q\}$. Since P and Q are compact it follows that $\delta > 0$. Given a k-cylinder $C \equiv (\text{conv } P) + F$, if $Q \cap C = \varnothing$ then the result follows directly. If $Q \cap C \neq \varnothing$, then we let

Ω be the intersection of F and the unit sphere about the origin in E^n. For each point $w \in \Omega$ we define r_w to be the ray from the origin through w and F_w to be the $(k-1)$-dimensional subspace contained in F which is perpendicular to r_w. Then for each point $q \in Q \cap C$, we define

$$A_q \equiv \{w \in \Omega : S_q \text{ is contained in the component of } C \sim [(\operatorname{conv} P) + F_w] \text{ which intersects } (\operatorname{conv} P) + r_w\}$$

where $S_q \equiv \{x : \|x-q\| < \delta/2\}$. (See Figure 1.)

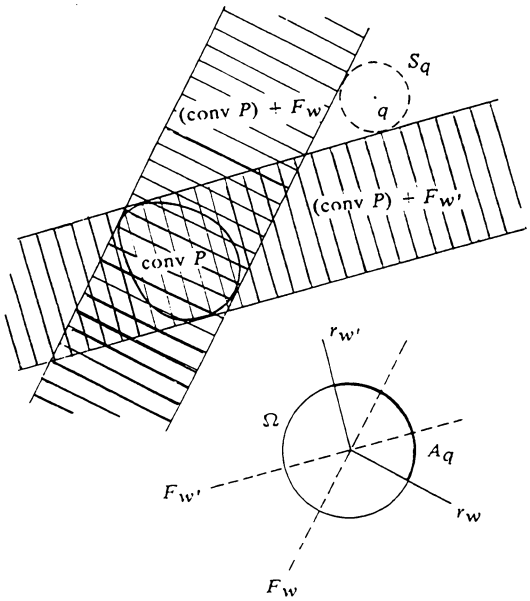

FIGURE 1

We claim first that, for each $q \in Q \cap C$, A_q is a compact strongly convex subset of Ω. To see this we pick an A_q and define, for each $w \in A_q$, $\mathscr{G}_w$ to be the component of $C \sim [(\operatorname{conv} P) + F_w]$ which intersects $(\operatorname{conv} P) + r_w$. Thus given two distinct points w and w' in A_q we must show that $q \in \mathscr{G}_x$ where x is a point on the small arc of the great circle determined by w and w'. Now $q \in \mathscr{G}_w \cap \mathscr{G}_{w'}$ and $\mathscr{G}_w \cap \mathscr{G}_{w'}$ is contained in $\mathscr{G}_x$, so $q \in \mathscr{G}_x$. Furthermore, since S_q is open, A_q is a compact subset of some open hemisphere and thus contains no antipodal points.

Secondly, we claim that if $q_1, \cdots, q_m$ $(1 \leqq m \leqq k)$ are any m points in $Q \cap C$, then $\bigcap_{i=1}^m A_{q_i} \neq \varnothing$. To see this we note that $d(\operatorname{conv}\{q_1, \cdots, q_m\}, \operatorname{conv} P) \geqq \delta$. Thus $d(\operatorname{conv}\{S_{q_1}, \cdots, S_{q_m}\}, \operatorname{conv} P) > \delta/2$ and so there exists a hyperplane H strictly separating $\{S_{q_1}, \cdots, S_{q_m}\}$ and P. Let H' be the $(n-1)$-dimensional subspace parallel to H, and let $G \equiv H' \cap F$. Now $F \not\subset H'$ since

H separates P and $\{S_{q_1}, \cdots, S_{q_m}\}$, and so G is a $(k-1)$-dimensional subspace. It follows that $\{S_{q_1}, \cdots, S_{q_m}\}$ is contained in one of the two components of $C \sim [(\text{conv } P)+G]$, and we may choose $w \in \Omega$ so that r_w is perpendicular to G and $(\text{conv } P)+r_w$ intersects the component that contains $\{S_{q_1}, \cdots, S_{q_m}\}$. Then $w \in \bigcap_{i=1}^m A_{q_i}$.

Combining the two claims and Theorem 3, we see that there exists a pair of antipodal points $\{y, -y\}$ in Ω such that each A_q $(q \in Q \cap C)$ intersects $\{y, -y\}$. It follows that the $(k-1)$-cylinder $(\text{conv } P)+F_y$ has empty intersection with Q.

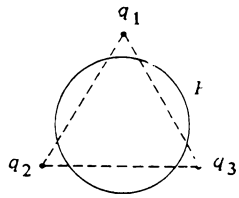

FIGURE 2

EXAMPLE. To see that Theorem 2 is a best theorem in the sense that one cannot in general weaken the hypotheses and obtain the same conclusion, let P be a circle in E^2 and let $Q \equiv \{q_1, q_2, q_3\}$ be the vertices of a triangle such that P intersects each edge of the triangle but each vertex is outside P. (See Figure 2.) Then each point of Q can be strictly separated from P by a hyperplane, but clearly there does not exist any 1-cylinder generated by P which misses Q.

Theorem 2 is not a proper generalization of Carathéodory's theorem, but by changing the conditions slightly we obtain the following theorem which includes Carathéodory's result.

THEOREM 5. *Let P and Q be nonempty compact subsets of E^n. Suppose for a fixed integer k $(2 \leqq k \leqq n+1)$ that each subset of k or fewer points of Q can be strictly separated from P by a hyperplane. Then given any $(k-1)$-cylinder of the form $D \equiv (\text{conv } P)+F_1$ there exists a $(k-2)$-cylinder of the form $E \equiv (\text{conv } P)+F_2$ such that $E \subset D$ and $Q \cap D$ is contained in one of the two connected components of $D \sim E$.*

PROOF. Let $\delta \equiv \inf\{d(\text{conv } T, \text{conv } P): T \text{ is a subset of } k \text{ or fewer points of } Q\}$. Since P and Q are compact it follows that $\delta > 0$. Given a $(k-1)$-cylinder $D \equiv (\text{conv } P)+F_1$, if $Q \cap D = \varnothing$ then the result follows directly. If $Q \cap D \neq \varnothing$, then we let Ω be the intersection of F_1 and the unit sphere about the origin in E^n. For each point $w \in \Omega$ we define r_w to be the ray from the origin through w and F_w to be the $(k-2)$-dimensional subspace contained in F_1 which is perpendicular to r_w. Then for each point $q \in Q \cap D$,

we define

$$A_q \equiv \{w \in \Omega : S_q \text{ is contained in the component of } D \sim [(\operatorname{conv} P) + F_w] \text{ which intersects } (\operatorname{conv} P) + r_w\}$$

where $S_q \equiv \{x : \|x-q\| < \delta/2\}$. (See Figure 1.)

As in the proof of Theorem 2, we see that each A_q ($q \in Q \cap D$) is a compact strongly convex subset of Ω and that if $q_1, \cdots, q_m$ ($1 \leqq m \leqq k$) are any m points in $Q \cap D$, then $\bigcap_{i=1}^m A_{q_i} \neq \varnothing$. Since Ω is the unit sphere about the origin in the $(k-1)$-dimensional space F_1, Theorem 4 implies that there exists a point y in $\bigcap_{q \in Q \cap D} A_q$. Letting $E \equiv (\operatorname{conv} P) + F_y$ we have $Q \cap D$ contained in the component of $D \sim E$ which intersects $(\operatorname{conv} P) + r_y$.

It should be noted that when $k = n+1$, then Theorem 5 is equivalent to the following theorem due to P. Kirchberger [**5**]. A proof of this equivalence may be found in Lay [**6**, p. 32].

THEOREM 6. *Let P and Q be nonempty compact subsets of E^n. Then P and Q can be strictly separated by a hyperplane if and only if for each subset T of $n+2$ or fewer points of $P \cup Q$ there exists a hyperplane which strictly separates $T \cap P$ and $T \cap Q$.*

REFERENCES

1. C. Carathéodory, *Über den Variabilitätsbereich der Koeffizienten von Potenzreihen, die gegebene Werte nicht annahmen*, Math. Ann. **64** (1907), 95–115.

2. O. Hanner and H. Rådström, *A generalization of a theorem of Fenchel*, Proc. Amer. Math. Soc. **2** (1951), 589–593. MR **13**, 377.

3. E. Helly, *Über Mengen konvexer Körper mit gemeinschaftlichen Punkten*, Jabr. Deutsch. Math. Verein. **32** (1923), 175–176.

4. A. Horn, *Some generalizations of Helly's theorem on convex sets*, Bull. Amer. Math. Soc. **55** (1949), 923–929. MR **11**, 200.

5. P. Kirchberger, *Über Tschebyschefsche Annäherungsmethoden*, Math. Ann. **57** (1903), 509–540.

6. S. Lay, *Combinatorial separation theorems and convexity*, Ph.D. Dissertation, University of California, Los Angeles, 1971.

DEPARTMENT OF MATHEMATICS, AURORA COLLEGE, AURORA, ILLINOIS 60507