ON THE ASYMPTOTIC SOLUTIONS OF DIFFERENTIAL EQUATIONS, WITH AN APPLICATION TO THE BESSEL FUNCTIONS OF LARGE COMPLEX ORDER*

BY

RUDOLPH E. LANGER

1. **Introduction.** The theory of asymptotic formulas for the solutions of an ordinary differential equation

$$y''(x) + p(x)y'(x) + \{\rho^2\phi^2(x) + q(x)\}y(x) = 0,$$

for large complex values of the parameter ρ^2, may be regarded as classical in the presence of certain customary hypotheses which may be enunciated as follows:†

(a) that the variable x is real;

(b) that on the interval considered the coefficient $\phi^2(x)$ is continuous and bounded from zero; and

(c) that $\phi^2(x)$ is essentially real (i.e., except possibly for a constant complex factor).‡

The author has sought in an earlier paper, which will be referred to throughout the present discussion by the designation [L],§ to extend the theory to the case in which the function $\phi^2(x)$ vanishes in the manner of some power of the variable at a point of the interval given. The discussion was restricted to the case of a real variable, and the hypothesis (c) above was retained in an appropriately modified form, namely, in an assumption of the essential reality of the quotient of $\phi^2(x)$ by the power of the variable involved in it as a factor.

---

* Presented to the Society, September 9, 1931; received by the editors December 27, 1931.

† Cf. e.g. Birkhoff, *On the asymptotic character of the solutions*, etc., these Transactions, vol. 9 (1908), p. 219;

Tamarkin, *Some General Problems of the Theory of Ordinary Linear Differential Equations*, etc., Petrograd, 1917, and Mathematische Zeitschrift, vol. 27 (1927), p. 1;

Birkhoff and Langer, *The boundary problems and developments associated with a system of ordinary linear differential equations*, etc., Proceedings of the American Academy of Arts and Sciences, vol. 58 (1923), p. 51.

‡ In the absence of hypothesis (c) the asymptotic forms have been given only for certain regions of the ρ plane.

§ These Transactions, vol. 33 (1931), p. 23.

The present paper engages to derive the asymptotic forms in the absence of all three of the hypotheses at issue. The variable is taken to be complex, ranging over a region (finite or infinite) of the complex plane, and no restriction upon the value of arg ϕ^2 is imposed. It is assumed that at some point of the given region the coefficient ϕ^2 vanishes to the order ν, though the case of a coefficient which is bounded from zero is included through the admission of $\nu=0$ as a permitted value. The discussion applies, of course, by specialization to the cases of a real variable or parameter.

As in the case of the more restricted considerations of paper [L] the discussion centers about the phenomenon which is associated in the theory of the Bessel functions with the name of Stokes, and under which a specific solution of the differential equation is represented asymptotically by one and the same analytic expression only so long as the variable and parameter are suitably confined in their variation. For a general asymptotic representation of the solutions the combinations of forms employed must be abruptly changed as variable or parameter pass certain specifiable frontiers in their respective complex planes. The law governing this phenomenon depends upon the degree to which the coefficient ϕ^2 vanishes, and is quantitatively described by the formulas to be derived.

Of the two parts of the paper the first is concerned with the general theoretical discussion culminating in the derivation of the ultimate asymptotic formulas and their presentation in forms suitable for applications. It is perhaps hardly necessary to remark upon the field of such applications which is presented by the Schrödinger equations for simple physical systems as they arise in the theory of wave mechanics.* These equations for particular individual systems have been discussed at some length by divers investigators and by a diversity of methods. Not infrequently the focal point of interest lies in the phenomenon referred to above, and a precise analysis of it is often essential to a determination of the wave function and of the possible energy levels for the given system. The formulas of Part I are generally directly applicable.

The second or final part of the paper is given to a discussion and derivation of formulas for the Bessel functions of large complex order and complex variable. The deductions of the respective forms from the results of Part I is followed by a determination of the regions of their validity successively for the cases in which (1) the parameter is of fixed argument; (2) the variable is of fixed argument; (3) both variable and parameter vary unrestrictedly and independently. Such asymptotic formulas have, of course, been previously known. The method by which they have been obtained is, however, totally

* The author hopes in a later paper to give a general discussion of these applications.

different from that of the present paper and is neither elementary nor of any wide applicability to other functions.

Unfortunately the application of the asymptotic formulas to specific cases is never entirely simple, being complicated both by the fact that the regions of validity are not easily describable, and by the fact that the formulas involve multiple-valued functions which must be suitably determined. It seems to the author that the formulations obtained naturally by an approach through the present method and given in Part II have some advantages of simplicity. It is shown briefly that they agree with the formulas in their familiar form as given by Debye. The formulas obtained for application when the variable and parameter are nearly equal are formally those already given in the paper [L] where the question of their advantages was raised.

In its formal aspects and in the method used the present paper closely resembles the paper [L]. Considerable reference to the latter will therefore be possible and will be made when developments of a purely formal character are concerned.

Part I

The asymptotic solutions of the general differential equation

2. **The given equation.** A change of variables may be made to reduce the differential equation as given above to the normal form

$$u''(z) + \{\rho^2\phi^2(z) - \chi(z)\}u(z) = 0, \tag{1}$$

and simultaneously to transfer to the origin the point at which the coefficient ϕ^2 vanishes. This preliminary reduction will be assumed to have been made, and the form (1) will be adopted as basic in the discussion to follow. The precise specifications upon the equation are to be formulated below as hypotheses with enumeration from (i) to (v). The designation R_z which occurs in these statements is to be thought of as applied to any simply connected region of the complex z plane which contains the origin and in which the several hypotheses are simultaneously fulfilled. The existence of some such region is to be assumed for the equation given. The hypotheses (i) and (ii) may be stated immediately as follows; the remaining ones (iii) to (v) are conveniently left for enunciation at appropriate points as the discussion develops.

(i) *Within the region R_z the coefficient $\phi^2(z)$ is of the form $\phi^2(z) \equiv z^\nu\phi_1^2(z)$, with ν a real non-negative constant, and $\phi_1^2(z)$ a single-valued analytic function which is bounded from zero.*

(ii) *Within the region R_z the coefficient $\chi(z)$ is analytic.*

The parameter ρ is to be thought of as complex and as subject numerically to some lower bound but to no upper bound. No restriction upon its argument will be assumed in the course of the general discussion, the results being therefore applicable irrespective of special restrictions which may exist in the case of particular equations. Such values of z and ρ as fulfill the various specifications will be referred to inclusively as *admitted values*.

A transfer of constant factors from the function $\phi^2(z)$ to the parameter ρ^2 is evidently without significance for the given equation. It may be assumed, therefore, without loss of generality that $\arg \phi_1^2(0)=0$. This convention, together with the continuity of the function concerned, determines $\arg \phi_1^2(z)$ for all values of z, and the formula

$$\phi(z) = z^{\nu/2}\phi_1(z)$$

is unambiguous if the notation is interpreted in accordance with the rule

$$f^c \equiv |f|^c e^{ic\arg f} * \quad (c \text{ real}).$$

In general (i.e., except in the case that ν is an even integer or zero) the function $\phi(z)$ is multiple-valued in R_z. It is convenient, therefore, to consider this region as covered by a Riemann surface appropriate to a single-valued representation of the function in question. This surface (to be designated the *surface* R_z in distinction to its single-sheeted projection the *region* R_z) has under the hypothesis (i) a single branch point located at the origin. Its order depends upon the character of the constant ν, and is finite or infinite according as ν is rational or not. In particular, if ν is an even integer the surface consists of a single sheet.

3. **The related equation.** On the surface R_z the integral

$$\Phi \equiv \int_0^z \phi(z)dz \tag{2}$$

is independent of the path, and the function defined by it is evidently of the form

$$\Phi = z^{\nu/2+1}\Phi_1(z),$$

with $\Phi_1(z)$ single-valued and analytic in R_z and $\Phi_1(0)\neq 0$. It is essential to

* This interpretation will be understood throughout the paper.

the discussion to impose upon this function $\Phi_1(z)$ the following hypothesis:

(iii) *Within the region R_z the function $\Phi_1(z)$ is bounded from zero.**

With the constant μ defined by the relation

$$\mu = \frac{1}{\nu + 2},$$

it is seen directly that the function

$$\Psi(z) \equiv \{\Phi(z)\}^{1/2-\mu}/\{\phi(z)\}^{1/2}$$

is single-valued and analytic in R_z. Moreover, in any finite portion of R_z it is bounded from zero, i.e., with some choice of the constant M, $|\Psi(z)|^{-1} < M$.

Let the complex variable ξ be defined by the formula

$$\xi = \rho\Phi(z), \tag{3}$$

and let $C_{\pm\mu}$ represent any cylinder function of the order $\pm\mu$. It is a matter of direct computation then [L §3] to show that the function

$$y(z) = \Psi(z)\xi^{\mu}C_{\pm\mu}(\xi) \tag{4}$$

satisfies a differential equation

$$y''(z) + \{\rho^2\phi^2(z) - \omega(z)\}y(z) = 0, \tag{5}$$

with a coefficient $\omega(z)$ which is analytic and single-valued in R_z. The equation (5) which closely resembles the given equation (1) is to be referred to as the *related equation.*

4. **The variables Φ and ξ.** The relation (2) defines a map of the surface R_z upon a corresponding Riemann surface R_Φ, which projects in the plane of the complex variable Φ upon a region also to be denoted by R_Φ. The origin $\Phi = 0$ corresponds to the point $z = 0$ and marks the single branch point of the surface. At this point corresponding angles in the two surfaces are of magnitudes in the ratio $1/(2\mu):1$, and otherwise the map is conformal.

The surface and region R_Φ are in turn mapped by the relation (3) upon a surface and a region R_ξ in the domain of the variable ξ. This map is conformal without exception since the surface R_ξ is evidently obtainable from R_Φ by a magnification with the factor $|\rho|$ coupled with a rotation about the origin through the angle arg ρ.

---

* This hypothesis is automatically fulfilled in the case treated in paper [L]. Simple examples show that this is not so in general. Thus if $\phi(z) = z \exp z^2$, then

$$\Phi_1(z) = (e^{z^2} - 1)/(2z^2),$$

and hypothesis (iii) requires that the region R_z exclude fixed neighborhoods of the points $z = (\pm 2n\pi i)^{1/2}$, $n \neq 0$.

The relations between the several variables determine for any configuration (region or curve) on one of the Riemann surfaces concerned, corresponding configurations on the other two. It will be convenient to use a single designating symbol for such corresponding figures, and to indicate by explicit statement, when necessary, the surface upon which the figure is contemplated. Corresponding points will be indicated by use of the same subscript or other index.

The axes of reals and imaginaries on the surface R_ξ, and the corresponding curves on R_Φ and R_z, divide these surfaces into regions to be designated by the symbols $\Xi_{k,l}$, $l=1, 2$; $k=0, \pm 1, \pm 2, \cdots$. The enumeration is made as follows:

$$\begin{aligned} &\Xi_{k,1} : (k - \tfrac{1}{2})\pi \leqq \arg \xi \leqq k\pi, \\ &\Xi_{k,2} : k\pi \leqq \arg \xi \leqq (k + \tfrac{1}{2})\pi. \end{aligned} \tag{6}$$

If the constant ν is rational the Riemann surfaces will be of finite order, and in this event only a finite number of the regions $\Xi_{k,l}$ will be distinct. If ν is irrational no repetition occurs and the set is infinite. It may be remarked that on the surfaces R_Φ and R_z the boundaries of the regions $\Xi_{k,l}$ are dependent upon the parameter ρ.

It is of advantage for subsequent use to agree at this point to the reservation of the special symbols Γ and r, for the designation of configurations respectively characterized as follows:

The symbol Γ is to designate an ordinary curve upon which, as seen on the surface R_ξ, the ordinate varies monotonically with the arc length.*

The symbol r is to designate a region (finite or infinite) which, as seen on the surface R_ξ, has the properties

(a) *that it lies entirely on some one of the regions $\Xi_{k,l}$;*

(b) *that its boundary contains the origin and consists of ordinary curves;*

(c) *that at most a single segment of any line $\mathfrak{I}(\xi) =$ a constant is included in the interior of the region.*

With the regions of the type r thus defined certain facts as follows may be noted for future reference. Firstly, any point of such a region may be connected with the origin by a curve of the type Γ which lies entirely in the region. Secondly, if the boundary of the region r contains a point P_m at which $|\mathfrak{I}(\xi)|$ is a maximum, then every point of the region may be connected with P_m by a curve Γ which lies in the region. In the alternative, i.e., if there exists no point P_m, the region r is necessarily infinite, and in this case there exists through each point of the region a curve Γ which extends to infinity, remain-

* In the sense of non-decreasing or non-increasing.

ing in the region, and upon which $|\mathfrak{I}(\xi)|$ is non-decreasing as ξ recedes from the origin.

5. **The related solutions** $y_{k,j}(z)$. The general solution of the related equation (5) is given by the formula (4) if the cylinder function involved is not specified. On the other hand, particular solutions result from particular choices of $C_{\pm\mu}$, and this fact will be applied to associate with any region (6) a pair of related solutions $y_{k,1}(z)$, $y_{k,2}(z)$ as follows. The Bessel functions $H_\mu^{(1)}(\xi)$, $H_\mu^{(2)}(\xi)$,* or any linear combinations of them, are admissible in the roles of the cylinder functions $C_{\pm\mu}$ and hence the following formulas define for each region $\Xi_{k,l}$ according as the integer k is even or odd an associated pair of solutions, i.e.,

$$
(7)\qquad y_{k,j}(z) = \begin{cases} \dfrac{\Psi(z)}{i^k A_j}\,\xi^\mu H_\mu^{(j)}(\xi e^{-k\pi i}), & \text{if } k \text{ is even,} \\[2ex] \dfrac{\Psi(z)}{i^k A_{3-j}}\,\xi^\mu H_\mu^{(3-j)}(\xi e^{-k\pi i}), & \text{if } k \text{ is odd,} \end{cases}
$$

$$
A_j = \left(\frac{2}{\pi}\right)^{1/2} e^{\mp(\mu+1/2)\pi i/2}.\ \dagger
$$

The peculiar choice of the constant factors in these formulas is due to the purpose of obtaining solutions with simple asymptotic forms.

Let the definition of a function $\bar{v}(z)$ in terms of the corresponding function $v(z)$, whatever the latter may be, be fixed by the relation

$$
(8)\qquad \bar{v}(z) = \frac{\Psi^2(z)}{i\rho^{2\mu}}\left\{v'(z) - \frac{\Psi'(z)}{\Psi(z)}v(z)\right\}.
$$

Then it may be shown [L § 4] that the formulas for the functions $\pm\,\bar{y}_{k,j}(z)$ are obtainable from the relations (7) by the mere formal substitution of $(1-\mu)$ in place of μ. Since the pair of functions $v(z)$, $\bar{v}(z)$ is equivalent to the pair $v(z)$, $v'(z)$, in the sense that either is easily deducible from the other, the definition (8) serves as the medium for a discussion of the derivatives $y'_{k,j}(z)$ which avoids unnecessary repetition.

Familiar formulas [L(13)] may be drawn upon to supply on the basis of formulas (7) the asymptotic forms

---

* The Bessel functions of the third kind, cf. Watson, G. N., *A Treatise on the Theory of Bessel Functions*, Cambridge University Press, 1922, p. 73.

† In this as in all subsequent formulas a double sign is to indicate the amalgamation of two formulas into one. It will be understood that the upper signs are associated with the index value $j=1$ and the lower signs with $j=2$.

$$
(9)\qquad \begin{aligned} y_{k,j}(z) &\sim \frac{e^{\pm i\xi}}{\rho^{1/2-\mu}\phi^{1/2}(z)}\left\{1+\sum_{n=1}^{\infty}\frac{c_n^{k,j}}{\xi^n}\right\}, \text{ for } \xi \text{ in } \Xi_{k,1} \text{ or } \Xi_{k,2}, \\ \pm\, \bar{y}_{k,j}(z) &\sim \frac{\rho^{1/2-\mu}\Phi^{1-2\mu}(z)e^{\pm i\xi}}{\phi^{1/2}(z)}\left\{1+\sum_{n=1}^{\infty}\frac{\bar{c}_n^{k,j}}{\xi^n}\right\}, \end{aligned}
$$

in which the coefficients $c_n^{k,j}$ and $\bar{c}_n^{k,j}$ are known constants. Moreover, it may also be deduced from the formulas (7) [L(21)] that

$$
(10)\qquad |\, y_{k,j}(z)\,| < M, \quad |\, \bar{y}_{k,j}(z)\,| < M, \text{ when } |\,\xi\,| \leqq N.^*
$$

6. The formal solutions. If the function $\theta(z)$ is defined by the formula

$$
\theta(z) \equiv \chi(z) - \omega(z),
$$

the equation (1) may be written in the form

$$
u''(z) + \{\rho^2\phi^2(z) - \omega(z)\}u(z) = \theta(z)u(z).
$$

Hence it possesses [L §5], for any indices k, j and any choice of a path of integration on the surface R_z, a solution $u_{k,j}(z)$ satisfying the equation

$$
(11)\quad u_{k,j}(z) = y_{k,j}(z) + \frac{1}{2i\rho^{2\mu}}\int^z \{y_{k,1}(z)y_{k,2}(z_1) - y_{k,2}(z)y_{k,1}(z_1)\}\theta(z_1)u_{k,j}(z_1)dz_1.
$$

The abbreviations

$$
(12)\qquad Y_j(z) = \frac{y_{k,j}(z)}{\Psi(z)}e^{\mp i\xi}, \quad U_j(z) = \frac{u_{k,j}(z)}{\Psi(z)}e^{\mp i\xi}
$$

give to this equation the form

$$
U_j(z) = Y_j(z) + \frac{1}{\rho^{2\mu}}\int^z K_j(z, z_1, \rho)U_j(z_1)dz_1,
$$

namely, that of an integral equation with the kernel

$$
(13)\quad K_j(z, z_1, \rho) = \pm\frac{\theta(z_1)\Psi^2(z_1)}{2i}\{Y_j(z)Y_{3-j}(z_1) - Y_{3-j}(z)Y_j(z_1)e^{\mp 2i(\xi-\xi_1)}\}.
$$

It follows that the equation is satisfied formally by the infinite series

$$
(14)\qquad U_j(z) = Y_j(z) + \sum_{n=1}^{\infty}\frac{Y_j^{(n)}(z)}{\rho^{n\sigma}},
$$

of which the terms are obtainable from the recursion formulas

* Here, as in the following, the letters M and N are used as generic symbols to indicate merely some positive constant.

$$(15)\qquad Y_j^{(n)}(z) = \rho^{\sigma-2\mu}\int^z K_j(z, z_1, \rho)Y_j^{(n-1)}(z_1)dz_1,\quad Y_j^{(0)}(z) \equiv Y_j(z).$$

In so far as these formal considerations are concerned, the value assigned to the constant σ in formulas (14) and (15) is of no significance.

7. **Lemmas.** It is to be shown subsequently that with suitable adjustment of the unspecified elements in the formulas (14) and (15) the infinite series in the former converges and represents a true solution of the given equation. Preparatory to this deduction it is of advantage to formulate at this point certain considerations in the form of lemmas.

Let the indices k, l be chosen, and upon the region $\Xi_{k,l}$ let r be any subregion of the type described in §4. Through each point ξ of this region two curves Γ may be drawn, the one connecting ξ with the origin and the other extending either to a point ξ_m at which $|\mathfrak{J}(\xi)|$ is a maximum or to infinity according as the character of the region r may determine. Let the subscripts be assigned so that Γ_1 denotes the curve of this pair upon which $\mathfrak{J}(\xi)$ is algebraically a minimum at the point ξ, while Γ_2 denotes the one upon which $\mathfrak{J}(\xi)$ has at ξ its maximum. It is proposed to consider integrals of the form

$$(16)\qquad I(\Gamma_j') \equiv \int_{\Gamma_j'}\xi^{(1/2-\mu)s}K_j(z, z_1, \rho)B(z_1, \rho)dz_1,$$

in which (a), Γ_j' is an arc of a curve Γ_j; (b), the number s is interpreted thus:

$$s = \begin{cases} 0, \text{ when } |\xi| \leqq N, \\ 1, \text{ when } |\xi| > N; \end{cases}$$

and (c), the function $B(z, \rho)$ is analytic in the region r and such that

$$(17)\qquad |\xi^{(1/2-\mu)s}B(z, \rho)| < M.$$

LEMMA 1. *If the arc Γ_j' lies in the portion of the region r in which $|\xi| \leqq N$, then*

$$|I(\Gamma_j')| < M|\rho|^{-2\mu}.$$

The formulas (9), (10) and (12) show that

$$(18)\qquad |\xi^{(1/2-\mu)s}Y_j(z)| < M.$$

When $|\xi_1| \leqq N$, therefore, formula (13) yields the relation

$$|\xi^{(1/2-\mu)s}K_j(z, z_1, \rho)| < M,$$

and the integrand of (16) is accordingly bounded. Since

$$dz_1 = \frac{\Psi^2(z_1)}{\rho^{2\mu}}\cdot\frac{d\xi_1}{\xi_1^{1-2\mu}},$$

it follows that

$$|I(\Gamma_j')| < \frac{M}{|\rho|^{2\mu}} \int_{\Gamma_j'} \left| \frac{d\xi_1}{\xi_1^{1-2\mu}} \right|,$$

and from this the assertion of the lemma is clear.

LEMMA 2. *If the arc Γ_j' lies in a portion of the region r in which $|\xi| \geqq N$, and $|z| \leqq N_1$, then*

$$|I(\Gamma_j')| \leqq M |\rho|^{2\mu-\sigma_1},$$

where

$$\sigma_1 = \begin{cases} 1, \text{ if } \mu > \frac{1}{4}, \\ 1-\epsilon, \text{ with } \epsilon > 0 \text{ but arbitrarily small, if } \mu = \frac{1}{4}, \\ 4\mu, \text{ if } \mu < \frac{1}{4}. \end{cases}$$

For ξ_1 on the arc Γ_j', the value $\mp i(\xi-\xi_1)$* has a negative real part and the function $\exp\{\mp i(\xi-\xi_1)\}$ is accordingly bounded. Formula (13) shows then that

$$|\xi^{(1/2-\mu)s}\xi_1^{1/2-\mu}K_j(z, z_1, \rho)| < M |\theta(z_1)\Psi^2(z_1)|, \tag{19}$$

and since the right member of this is bounded when $|z| \leqq N_1$, it follows that

$$|I(\Gamma_j')| < \frac{M}{|\rho|^{2\mu}} \int_{\Gamma_j'} \left| \frac{d\xi_1}{\xi_1^{2-4\mu}} \right|.$$

Since for the values considered ξ_1 may be of at most the order of $|\rho|$, the conclusion of the lemma is readily deduced.

Lemmas 1 and 2 are sufficient for the discussion of all integrals (16) if the region r in question is finite. On the other hand, the case of an infinite region r requires the further lemma which follows.

LEMMA 3. *If a relation*

$$\int_{\Gamma_j'} \left| \frac{\theta(z_1)}{\phi(z_1)} dz_1 \right| < M$$

is satisfied uniformly with respect to all arcs Γ_j' on which $|z_1| \geqq N_1$ (N_1 being some specific constant) then

$$|I(\Gamma_j')| < M |\rho|^{2\mu-1},$$

uniformly with respect to those arcs.

* See second note on p. 453.

The inequality (19) yields directly the relation

$$\left| I(\Gamma_j') \right| < M \int_{\Gamma_j'} \left| \frac{\theta(z_1)\Psi^2(z_1)}{\xi_1^{1-2\mu}} dz_1 \right|.$$

However,

$$\frac{\Psi^2(z_1)}{\xi_1^{1-2\mu}} = \frac{\phi(z_1)}{\rho^{1-2\mu}},$$

and hence

$$\left| I(\Gamma_j') \right| < \frac{M}{|\rho|^{1-2\mu}} \int_{\Gamma_j'} \left| \frac{\theta(z_1)}{\phi(z_1)} dz_1 \right|.$$

The conclusion is at hand.

8. **The solutions $u_{k,j}(z)$.** It is essential to the argument at hand that the lemmas established in the foregoing section be applicable for all admitted values of the variables. To assure this the list of hypotheses will be completed by the following additions:

(iv) *The region R_z is such that for any admitted value of ρ every point of the Riemann surface R_z may be included in some region of the type r.*

(v) *The region R_z is such that with some constant M the relation*

$$\int \left| \frac{\theta(z)}{\phi(z)} dz \right| < M$$

is valid uniformly with respect to integrations over all arcs on the surface R_z which for some admitted value of ρ are of the type Γ, and upon which $|z| \geqq N_1$, with some positive value N_1.

It is clear that for any finite region R_z the hypothesis (v) is vacuous. On the other hand, if the region is to be infinite it implies an assumption upon the given differential equation.

The relation

$$\left| \xi^{(1/2-\mu)s} Y_j^{(n)}(z) \right| < M^{n+1} \tag{20}$$

is valid when $n=0$ by (18) over the entire region R_z. Dependent upon a suitable choice of the constant σ it may be proved for an arbitrary n by the method of induction as follows. Let the inequality be assumed valid when $n=n_1$. The function $Y_j^{(n_1)}(z)M^{-n_1}$ is then of the form postulated for the function $B(z, \rho)$ in formula (17), and it follows that when the relation (15) is written

$$\text{(15a)} \quad \xi^{(1/2-\mu)s} Y_j^{(n_1+1)} = M^{n_1}\rho^{\sigma-2\mu} \int_{\Gamma_j'} \xi^{(1/2-\mu)s} K_j(z, z_1, \rho) Y_j^{(n_1)}(z_1) M^{-n_1} dz_1,$$

the integral involved is of the type (16) and therefore subject to the assertions of the lemmas.

Consider first the case in which z is confined to the portion $|\xi| \leqq N$ of the region $\Xi_{k,l}$. This region is of the type r (when $|\rho|$ is sufficiently large) and the integrals on the right of (15a) are, therefore, evaluated in their entirety by Lemma 1. It follows that if M is chosen sufficiently large then

$$\left| \xi^{(1/2-\mu)s} Y_j^{(n_1+1)}(z) \right| \leqq M^{n_1+1} |\rho|^{\sigma-4\mu},$$

whereby the relation (20) is proved if $\sigma = 4\mu$ and $|\xi| \leqq N$.

If z varies over a general region r the path of integration in either of the formulas (15a) consists of at most three arcs each of which yields an integral of the kind discussed by one of the three lemmas. Thus the relation (15a) yields the inequalities

$$\begin{aligned} \left| \xi^{(1/2-\mu)s} Y_j^{(n_1+1)}(z) \right| &\leqq M^{n_1} |\rho|^{\sigma-2\mu} \left\{ M|\rho|^{-2\mu} + M|\rho|^{2\mu-\sigma_1} + M|\rho|^{2\mu-1} \right\} \\ &< M^{n_1+1} |\rho|^{\sigma-\sigma_1}, \end{aligned}$$

and with the choice $\sigma = \sigma_1$ the relation (20) follows for all z of the chosen region.

With the formula (20) established it is clear that the series involved in the relations (14) converge when $|\rho|$ is sufficiently large, and that the functions thereby represented remain bounded after multiplication by $\xi^{(1/2-\mu)s}$. Agreeing to the use of the letter E as a generic symbol to designate a function which remains bounded uniformly in z and ρ when $|\rho|$ is sufficiently large, the results of resubstituting the values (12) into (14) may be formulated as in the theorems below. The derivation of formulas for the functions $\bar{u}_{k,j}(z)$ differs from that above for the functions $u_{k,j}(z)$ in but slight formal details, and the resulting formulas are as indicated in the respective statements which follow.

THEOREM 1. *Corresponding to any region $\Xi_{k,l}$ there exists a pair of solutions $u_{k,1}(z)$, $u_{k,2}(z)$ of the given differential equation which, when $|\rho|$ is sufficiently large, satisfy the relations*

$$u_{k,j}(z) = y_{k,j}(z) + \sum_{n=1}^{\infty} \frac{E_n(z, \rho)}{\rho^{4n\mu}};$$

$$\bar{u}_{k,j}(z) = \bar{y}_{k,j}(z) + \sum_{n=1}^{\infty} \frac{E_n(z, \rho)}{\rho^{4n\mu}},$$

for values of ξ in the region for which $|\xi| \leqq N$.

The functions E_n would be computable from the formulas (15).

THEOREM 2. *Corresponding to any region of the type r in $\Xi_{k,l}$, there exists a pair of solutions $u_{k,1}(z)$, $u_{k,2}(z)$, which for values z of the region and $|\rho|$ sufficiently large satisfy the relations*

$$u_{k,j}(z) = y_{k,j}(z) + \sum_{n=1}^{\infty} \frac{E_n(z, \rho)}{\rho^{n\sigma_1}},$$

$$\bar{u}_{k,j}(z) = \bar{y}_{k,j}(z) + \sum_{n=1}^{\infty} \frac{E_n(z, \rho)}{\rho^{n\sigma_1}},$$

when $|\xi| \leqq N$, and

$$u_{k,j}(z) = y_{k,j}(z) + \Psi(z)\xi^{\mu-1/2}e^{\pm i\xi} \sum_{n=1}^{\infty} \frac{E_n(z, \rho)}{\rho^{n\sigma_1}},$$

$$\bar{u}_{k,j}(z) = \bar{y}_{k,j}(z) + \Psi(z)\xi^{1/2-\mu}e^{\pm i\xi} \sum_{n=1}^{\infty} \frac{E_n(z, \rho)}{\rho^{n\sigma_1}},$$

when $|\xi| > N$, and which are therefore asymptotically described by the formulas

$$\begin{aligned} u_{k,j}(z) &\sim \frac{e^{\pm i\xi}}{\rho^{1/2-\mu}\phi^{1/2}(z)} S_{k,j}(z, \rho), \\ \bar{u}_{k,j}(z) &\sim \pm \frac{\rho^{1/2-\mu}\Phi^{1-2\mu}(z)}{\phi^{1/2}(z)} e^{\pm i\xi} S^{(1)}_{k,j}(z, \rho), \end{aligned} \tag{21}$$

for ξ in r, with

$$S_{k,j}(z, \rho) = 1 + \sum_{n=1}^{\infty} \left\{ \frac{E_n(z, \rho)}{\rho^{n\sigma_1}} + \frac{c_n^{k,j}}{\xi^n} \right\},$$

$$S^{(1)}_{k,j}(z, \rho) = 1 + \sum_{n=1}^{\infty} \left\{ \frac{E_n(z, \rho)}{\rho^{n\sigma_1}} + \frac{\bar{c}_n^{k,j}}{\xi^n} \right\}.$$

It should be observed that the solutions described in Theorem 1 are not those described in Theorem 2, although no distinction has been indicated by the notation used. The difference is involved in the choice of paths of integration in the formulas (11). On the same ground the solutions described in Theorem 2 are in general different for different sub-regions r on the same region $\Xi_{k,l}$.

9. **The solutions for general values of ξ such that $|\xi| \leqq N$.** The theorems of §8 describe certain pairs of solutions $u_{k,j}(z)$ of the given differential equation when the variable is confined to specifically associated regions r. From these results the form of an arbitrary solution for all admitted values of z and ρ may be deduced.

The formulas

$$y_j(z) = \Psi(z)\xi^{\mu}J_{\mp\mu}(\xi), \quad j = 1, 2,$$

in which the symbols $J_{\mp\mu}$ denote the familiar Bessel functions of the first kind, define a pair of solutions of the related equation. An associated pair of solutions $u_1(z)$, $u_2(z)$ of the given differential equation is thereupon determined by the relations

$$u_j(0) = y_j(0), \quad \bar{u}_j(0) = \bar{y}_j(0), \tag{22}$$

inasmuch as the origin is an ordinary point for both equations. Specifically the initial values of these solutions as computed from (22) are

$$\begin{aligned} u_1(0) &= \frac{2^{\mu}\Psi(0)}{\Gamma(1-\mu)}, & \bar{u}_1(0) &= 0, \\ u_2(0) &= 0, & \bar{u}_2(0) &= \frac{2^{1-\mu}\Psi(0)}{i\Gamma(\mu)}. \end{aligned} \tag{23}$$

With any sub-region r of a given region $\Xi_{h,l}$ a pair of solutions $u_{h,j}(z)$ is determined, and corresponding identities

$$u_{h,j}(z) \equiv \overset{(h)}{\alpha}_{1,j}u_1(z) + \overset{(h)}{\alpha}_{2,j}u_2(z), \quad j = 1, 2, \tag{24a}$$

subsist, with the inverse relations

$$u_j(z) \equiv \overset{(h)}{a}_{j,1}u_{h,1}(z) + \overset{(h)}{a}_{j,2}u_{h,2}(z). \tag{24b}$$

The corresponding identities for the related solutions may similarly be written in the form

$$y_{h,j}(z) \equiv \overset{(h)}{\gamma}_{1,j}y_1(z) + \overset{(h)}{\gamma}_{2,j}y_2(z), \tag{25a}$$

$$y_j(z) \equiv \overset{(h)}{C}_{j,1}y_{h,1}(z) + \overset{(h)}{C}_{j,2}y_{h,2}(z). \tag{25b}$$

Since the relations (25) involve only standard Bessel functions, familiar theory may be drawn upon for the values of the coefficients, which are accordingly found to be the following:

$$\begin{aligned} \overset{(2p)}{c}_{j,1} &= (2\pi)^{-1/2}e^{(2p-1/2)(1/2\mp\mu)\pi i}, & \overset{(2p+1)}{c}_{j,1} &= (2\pi)^{-1/2}e^{(2p+3/2)(1/2\mp\mu)\pi i}, \\ \overset{(2p)}{c}_{j,2} &= (2\pi)^{-1/2}e^{(2p+1/2)(1/2\mp\mu)\pi i}, & \overset{(2p+1)}{c}_{j,2} &= (2\pi)^{-1/2}e^{(2p+1/2)(1/2\mp\mu)\pi i}, \end{aligned} \tag{26a}$$

and

$$\overset{(h)}{\gamma}_{j,m} = \frac{(-1)^{j+m}\pi}{i\sin\mu\pi}\overset{(h)}{c}_{3-j,3-m}, \quad j, m = 1, 2. \tag{26b}$$

By virtue of the relations (22) the formulas (24a) yield upon substituting $z=0$ the forms

$$\alpha_{1,j}^{(h)} = \gamma_{1,j}^{(h)} \frac{u_{h,j}(0)}{y_{h,j}(0)}, \quad \alpha_{2,j}^{(h)} = \gamma_{2,j}^{(h)} \frac{\bar{u}_{h,j}(0)}{\bar{y}_{h,j}(0)}, \tag{27}$$

from which the coefficients on the left may be evaluated as is done in the following.

Let the functions $u_{h,j}(z)$ involved in the relations (27) be thought of in the first case as a pair of solutions described by Theorem 1. The formulas then reduce to the form

$$\alpha_{m,j}^{(h)} = \gamma_{m,j}^{(h)} \left\{ 1 + \sum_{n=1}^{\infty} \frac{E_n(\rho)}{\rho^{4n\mu}} \right\}, \quad j, m = 1, 2,$$

and from these corresponding values

$$a_{j,m}^{(h)} = c_{j,m}^{(h)} \left\{ 1 + \sum_{n=1}^{\infty} \frac{E_n(\rho)}{\rho^{4n\mu}} \right\}$$

are easily found. The explicit result which becomes available upon substituting these values into the identities (24) may be stated as follows:

THEOREM 3. *The solutions $u_1(z)$, $u_2(z)$ of the given differential equation which are determined by the initial values* (23) *are of the form*

$$u_j(z) = \Psi(z)\xi^{\mu} J_{\mp\mu}(\xi) + \sum_{n=1}^{\infty} \frac{E_n(z, \rho)}{\rho^{4n\mu}},$$

$$\bar{u}_j(z) = \pm\, i\Psi(z)\xi^{1-\mu} J_{\pm(1-\mu)}(\xi) + \sum_{n=1}^{\infty} \frac{E_n(z, \rho)}{\rho^{4n\mu}},$$

for all values of ξ such that $|\xi| \leqq N$.

THEOREM 4. *The solutions $u_{k,j}(z)$ described by Theorem* 1 *are of the form*

$$u_{k,j}(z) = \Psi(z)\xi^{\mu}\{\gamma_{1,j}^{(k)} J_{-\mu}(\xi) + \gamma_{2,j}^{(k)} J_{\mu}(\xi)\} + \sum_{n=1}^{\infty} \frac{E_n(z, \rho)}{\rho^{4n\mu}},$$

$$\bar{u}_{k,j}(z) = i\Psi(z)\xi^{1-\mu}\{\gamma_{1,j}^{(k)} J_{1-\mu}(\xi) - \gamma_{2,j}^{(k)} J_{-1+\mu}(\xi)\} + \sum_{n=1}^{\infty} \frac{E_n(z,\rho)}{\rho^{4n\mu}},$$

for all values of ξ such that $|\xi| \leqq N$, the coefficients being given by the formulas (26b) *and* (26a).

10. The solutions for general values of the variables. To obtain the formulas for the solutions $u_j(z)$ when $|\xi|$ is not restricted, the functions $u_{h,j}(z)$ involved in the formulas (24) and (27) may be chosen as a pair of

solutions described by Theorem 2. If the symbol [ ] is understood as indicating the abbreviation described thus:

$$[Q] = Q + \sum_{n=1}^{\infty} \frac{E_n(\rho)}{\rho^{n\sigma_1}},$$

the reasoning employed in §9 may be made to lead from the relations (27) to the formula

$$\alpha_{m,j}^{(h)} = \gamma_{m,j}^{(h)}[1], \tag{28a}$$

from which the equalities

$$a_{j,m}^{(h)} = c_{j,m}^{(h)}[1] \tag{28b}$$

follow. The results of substituting these values into the identities (24b) and (24a) are the following:

THEOREM 5. *The solutions $u_1(z)$, $u_2(z)$ determined by the initial values* (23) *have for $|\xi| \geqq N$ and $|\rho|$ sufficiently large the forms*

$$\begin{aligned} u_j(z) &\sim \frac{1}{\rho^{1/2-\mu}\phi^{1/2}(z)}\left\{a_{j,1}^{(h)}e^{i\xi}S_{h,1}(z,\rho) + a_{j,2}^{(h)}e^{-i\xi}S_{h,2}(z,\rho)\right\}, \\ \bar{u}_j(z) &\sim \frac{\rho^{1/2-\mu}\Phi^{1-2\mu}(z)}{\phi^{1/2}(z)}\left\{a_{j,1}^{(h)}e^{i\xi}S_{h,1}^{(1)}(z,\rho) - a_{j,2}^{(h)}e^{-i\xi}S_{h,2}^{(1)}(z,\rho)\right\}, \end{aligned} \tag{29}$$

in which the index h is determined by the region $\Xi_{h,l}$ containing the value ξ, and the coefficients are given accordingly by the formulas (28a) *and* (26a).

THEOREM 6. *Any pair of solutions $u_{k,j}(z)$ described by Theorem* 2 *are of the form*

$$\begin{aligned} u_{k,j}(z) &= \Psi(z)\xi^{\mu}\left\{\gamma_{1,j}^{(k)}J_{-\mu}(\xi) + \gamma_{2,j}^{(k)}J_{\mu}(\xi)\right\} \\ &\quad + \sum_{n=1}^{\infty} \frac{E_n(z,\rho)}{\rho^{n\sigma_1}}, \\ \bar{u}_{k,j}(z) &= i\Psi(z)\xi^{1-\mu}\left\{\gamma_{1,j}^{(k)}J_{1-\mu}(\xi) - \gamma_{2,j}^{(k)}J_{-1+\mu}(\xi)\right\} \\ &\quad + \sum_{n=1}^{\infty} \frac{E_n(z,\rho)}{\rho^{n\sigma_1}}, \end{aligned} \tag{30}$$

for general values of the variables, and are asymptotically described by the formulas

$$
(31)\qquad
\begin{aligned}
u_{k,j}(z) &\sim \frac{1}{\rho^{1/2-\mu}\phi^{1/2}(z)}\{A_{j,1}^{k,h}e^{i\xi}S_{h,1}(z,\rho) + A_{j,2}^{k,h}e^{-i\xi}S_{h,2}(z,\rho)\},\\
\bar{u}_{k,j}(z) &\sim \frac{\rho^{1/2-\mu}\Phi^{1-2\mu}(z)}{\phi^{1/2}(z)}\{A_{j,1}^{k,h}e^{i\xi}S_{h,1}^{(1)}(z,\rho) - A_{j,2}^{k,h}e^{-i\xi}S_{h,2}^{(1)}(z,\rho)\},
\end{aligned}
$$

with

$$
(32)\qquad
\begin{aligned}
A_{1,m}^{k,h} &= \frac{\pi}{i\sin\mu\pi}[\overset{(k)}{c}_{2,2}\overset{(h)}{c}_{1,m} - \overset{(k)}{c}_{1,2}\overset{(h)}{c}_{2,m}],\\
A_{2,m}^{k,h} &= \frac{-\pi}{i\sin\mu\pi}[\overset{(k)}{c}_{2,1}\overset{(h)}{c}_{1,m} - \overset{(k)}{c}_{1,1}\overset{(h)}{c}_{2,m}],\quad m = 1, 2,
\end{aligned}
$$

the index h being determined by the region $\Xi_{h,l}$ in which the value of ξ is contained.

Theorems 5 and 6 each describe a pair of solutions which, being linearly independent, are adequate for the representation of an arbitrary solution of the given differential equation. In practice the solutions of Theorem 5 will be called upon more naturally in the representation of a solution specified in terms of its values at $z=0$. On the other hand those of Theorem 6 are more directly adapted for the representation of a solution which is specified in terms of asymptotic characteristics which are to maintain for certain ranges of the variables. This latter is illustrated in the application of Part II.

In concluding it should be observed that when ξ passes from the regions (6) for any k to an adjacent region, each of the formulas (29) and (30) changes to the extent of a replacement of one of its coefficients. The coefficient in question, however, is in every case that attached to the exponential term which in the existing configuration of values is sub-dominant, i.e., is asymptotically negligible. The affected term does not in fact attain to asymptotic significance until the subsequent change in arg ξ reaches numerically the amount $\pi/2$. It will be clear from this that the coefficients prescribed for any given region by Theorems 5 and 6 do actually yield formulas which are valid over a considerably extended domain. Since the formulas are in any event the same for the pair of regions given by (6) for a specific index k, the following theorem may be readily verified.

THEOREM 7. *The asymptotic formulas given by* (29) *and* (30) *for any region $\Xi_{h,l}$ are valid for all ξ in the larger region $\Xi^{(h)}$ defined by the formula*

$$
(33)\qquad \Xi^{(h)} : (h-1)\pi + \epsilon \leqq \arg\xi \leqq (h+1)\pi - \epsilon,
$$

with ϵ denoting an arbitrary positive fixed constant which is sufficiently small.

The regions $\Xi^{(h)}$ for consecutive values of h obviously overlap. In their common parts either of the associated sets of formulas may be used, inasmuch as they are asymptotically equivalent.

Part II

An application to the theory of the Bessel functions of complex argument and large complex order

11. Introduction. The general cylinder function $C_\rho(\zeta)$ of complex order and argument may be shown readily by direct substitution to be a solution of the differential equation

$$u''(z) + \rho^2\{e^{2z} - 1\}u(z) = 0, \tag{34}$$

in which the independent variable z is defined by the relation

$$\zeta = \rho e^z.$$

The equation (34) is of the form (1) for values of z on the strip

$$-\pi \leqq \Im(z) < \pi, \ |z \pm \pi i| \geqq \epsilon > 0, \tag{35}$$

the specialization being given by the formulas

$$\phi^2(z) = e^{2z} - 1, \ \chi(z) \equiv 0.$$

Moreover, for the equation in question the values

$$\nu = 1, \ \mu = \tfrac{1}{3}, \ \sigma_1 = 1$$

obtain, consequent upon the fact that $\phi^2(z)$ vanishes to the order 1. The general formulas of Part I may therefore be drawn upon in particular for a determination of the asymptotic forms of the Bessel functions $J_\rho(\zeta)$, $H_\rho^{(1)}(\zeta)$, $H_\rho^{(2)}(\zeta)$, when $|\rho|$ is large. This deduction is the subject of the discussion which follows.

Inasmuch as the function $J_\rho(\zeta)$ is expressible in terms of the functions $H_\rho^{(j)}(\zeta)$ whereas the latter familiarly satisfy the relations

$$H_{\rho e^{q\pi i}}^{(j)}(\zeta) = e^{\pm q\rho\pi i} H_\rho^{(j)}(\zeta)^* \quad (q \text{ an integer}), \tag{36}$$

no loss of generality is involved in a restriction of the considerations to parameter values on the range

$$-\pi/2 \leqq \arg \rho < \pi/2. \tag{37}$$

Likewise the formulas

* Nielsen, *Handbuch der Theorie der Zylinderfunktionen*, Leipzig, 1904, p. 18.

$$
(38)\qquad \begin{aligned} H_\rho^{(j)}(\zeta e^{p\pi i}) = \mp \Bigg\{ & \frac{\sin (p+1)\rho\pi}{\sin \rho\pi} H_\rho^{(j)}(\zeta) \\ & + e^{\pm\rho\pi i} \frac{\sin p\rho\pi}{\sin \rho\pi} H_\rho^{(3-j)}(\zeta) \Bigg\} \end{aligned}
$$

may be invoked to permit restriction of the variable to values for which

$$
(39)\qquad -\pi + \arg \rho \leqq \arg \zeta \leqq \pi + \arg \rho,
$$

namely, to values for which z lies in the strip (35).

12. **The surfaces R_z, R_Φ and R_ξ.** As defined in Part I, the Riemann surface R_z over the strip (35) consists of two sheets. However, in the present case the variable of immediate interest is ζ, and since this is a single-valued function of z it is sufficient to confine the attention to the values of z upon a single sheet. The choice specified by the relation

$$
-\pi < \arg z \leqq \pi
$$

is a convenient one, and in accordance with this convention R_z will henceforth be understood to signify the strip (35) thought of as cut open along the negative axis of reals.

The relation

$$
(40)\qquad \phi = (e^{2z} - 1)^{1/2}
$$

maps the strip R_z in an obvious manner upon the plane of the complex quantity ϕ, the resulting ϕ-plane being cut along the negative axis of reals and also along the axis of imaginaries from the points $-i$ to i. This plane is in turn mapped upon the surface R_Φ by the relations

$$
(41)\qquad \Phi = \begin{cases} \phi - \tan^{-1} \phi, \\ \phi + \dfrac{i}{2} \log \dfrac{i - \phi}{i + \phi}, \end{cases}
$$

which are obtained by explicit integration from the formula (2). The resulting map of the upper half of the strip R_z upon the surface R_Φ is described with sufficient detail by the following tabulation of corresponding intervals, the lettering referring to the Figs. 1 and 2.

Line	z	ϕ	$\arg\left(\dfrac{i-\phi}{i+\phi}\right)$	$\left\lvert\dfrac{i-\phi}{i+\phi}\right\rvert$	Φ
OA	0 to ∞	0 to ∞	π to 0	1	0 to ∞
OB	0 to $-\infty$	0 to i	0	1 to 0	0 to $-i\infty$
BC	$\pi i-\infty$ to πi	i to 0	2π	0 to 1	$-\pi-i\infty$ to $-\pi$
CD	πi to $\pi i+\infty$	0 to $-\infty$	2π to π	1	$-\pi$ to $-\infty$

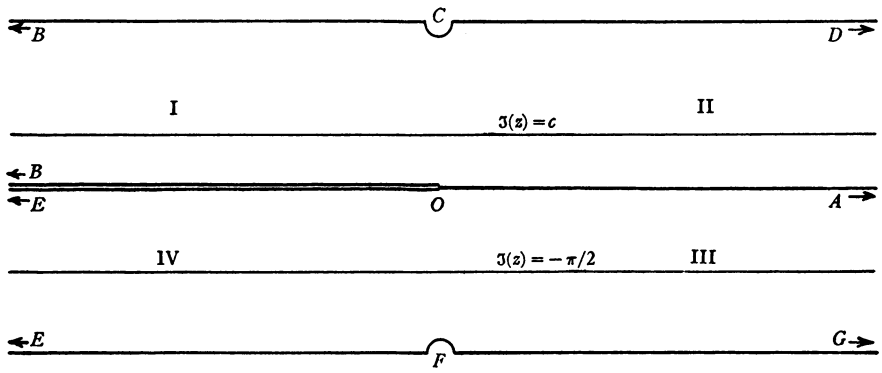

Fig. 1. R_z

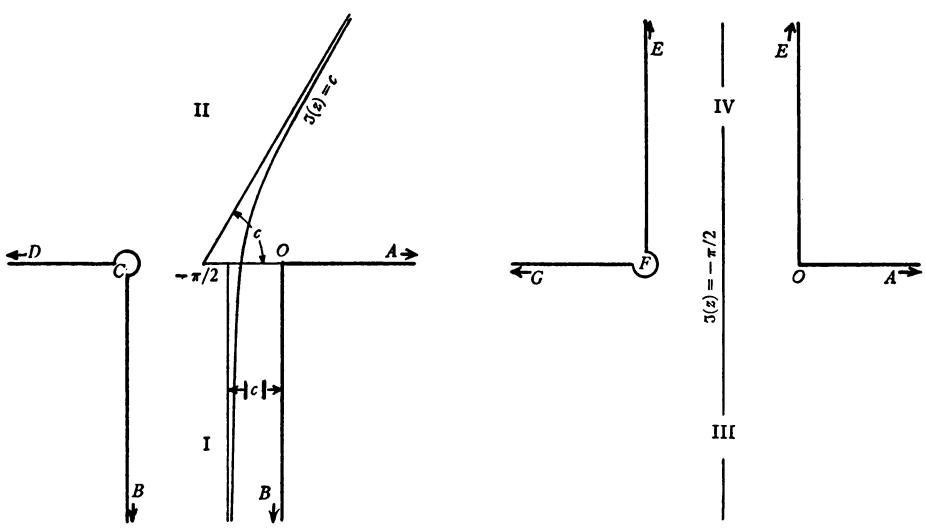

Fig. 2. R_Φ

The lower half of the strip R_z is similarly mapped as is also shown in the figures. The two parts of Fig. 2 are to be thought of as joined along the line

OA to comprise a Riemann surface which consists of one entire sheet and of two infinite strips of width π located in two further sheets respectively. The Roman numerals are used to indicate corresponding regions. The map is, of course, conformal except at the origin, where angles in R_z must be increased in the ratio 3:2 to obtain the corresponding angles upon R_Φ.

The formulas (40) and (41) yield readily the analytic evaluations

$$(42)\quad \begin{aligned} &(a)\quad \phi = e^z + O(e^{-z}),\\ &\qquad \Phi = e^z - \frac{\pi}{2} + O(e^{-z}), \text{ when } \mathfrak{R}(z) > 0;\\ &(b)\quad \phi = i + O(e^{2z}),\\ &\qquad \Phi = i\left\{z + \log\frac{e}{2}\right\} + O(e^{2z}), \text{ when } \mathfrak{R}(z) < 0,\ \mathfrak{I}(z) \geqq 0;\\ &(c)\quad \phi = -i + O(e^{2z}),\\ &\qquad \Phi = -i\left\{z + \log\frac{e}{2}\right\} + O(e^{2z}), \text{ when } \mathfrak{R}(z) < 0,\ \mathfrak{I}(z) < 0. \end{aligned}$$

From these it is found that any line $\mathfrak{I}(z) = c$ (c a real constant, $|c| < \pi$) is mapped on the surface R_Φ upon a curve having as asymptotes the following lines, namely, in the regions II or III, the line through the point $\Phi = -\pi/2$ with inclination c, and in the regions I or IV the line $\mathfrak{R}(\Phi) = -|c|$. When $c = \pm\pi/2$ these asymptotes and the curve itself coincide, the latter being a straight line.

Finally, the surface R_ξ may be obtained from R_Φ by a similarity transformation, consisting of a counter-clockwise rotation about the origin through the angle $\arg \rho$, and a change of scale by the factor $|\rho|$.

13. **The hypotheses.** An application of the formulas of Part I to the equation at hand is, of course, contingent upon the fulfillment of the various hypotheses (i) to (v) upon which the general theory was constructed. For the hypothesis (i) referred to the strip (35) this has been assured by the exclusion of some neighborhoods of the points $z = \pm\pi i$. The fulfillment of the hypothesis (ii), moreover, is obvious since for the equation in question $\chi(z) \equiv 0$.

The hypothesis (iii) requires the region R_z to exclude all zeros of the function other than that at the origin. This is easily shown as follows to be so for the region of Fig. 1. By (41) the relation $\Phi = 0$ implies $\tan\phi - \phi = 0$. However, after multiplication by the quantity $\bar{\phi}\cos\bar{\phi}\cos\phi/\mathfrak{I}(\phi^2)$ (ϕ signifying the complex conjugate of ϕ), the imaginary component of this equation is

$$\frac{\sinh 2\mathfrak{I}(\phi)}{2\mathfrak{I}(\phi)} - \frac{\sin 2\mathfrak{R}(\phi)}{2\mathfrak{R}(\phi)} = 0.$$

Hence it can be satisfied only by $\phi = 0$, for otherwise the first term on the left is greater than, and the second term less than, unity. In the strip of Fig. 1 this result specifies the origin, and the hypothesis in question is consequently fulfilled.

Fig. 2 obtains by an arbitrary rotation about its origin the character representative of the surface R_ξ for an arbitrary value of ρ. It is at once seen from this that the part of R_ξ contained in any specific quadrant is either itself a region of type r as defined in §4, or else is easily divisible into such regions. This is the requirement of hypothesis (iv) which is therefore met.

Lastly, a simple computation [L §11] based upon the formula [L (12)] for the coefficient $\omega(z)$ of the related equation may be made to show that

$$\frac{\theta(z)}{\phi(z)} = \begin{cases} O(e^{-z}), & \text{when } \Re(z) > 0, \\ O(z^{-2}), & \text{when } \Re(z) < 0. \end{cases}$$

It follows from this, together with the formulas (42), that

$$\frac{\theta(z)}{\phi(z)}\, dz = O\left(\frac{d\Phi}{\Phi^2}\right),$$

and since, in any region $|\Phi| \geqq N$, a relation

$$\int \left| \frac{d\Phi}{\Phi^2} \right| < M$$

is uniformly valid for all arcs of the type Γ, the concluding hypothesis (v) is fulfilled, and the general formulas of Part I are accordingly shown to be applicable to the equation (34) in the region R_z of Fig. 1.

14. The identification of the solutions $J_\rho(\zeta)$ and $H_\rho^{(j)}(\zeta)$. The linear interdependence of any three solutions of the given differential equation assures the existence of an identity

$$J_\rho(\zeta) \equiv C_{k,1} u_{k,1}(z) + C_{k,2} u_{k,2}(z), \tag{43}$$

for any choice of the index k. The coefficients may be functions of ρ but do not depend upon z. For their determination, therefore, it is permissible to substitute into the identity any admissible values of the variable. In application of this principle the formula

$$\lim_{\zeta \to 0} \left(\frac{e\zeta}{2\rho}\right)^{-\rho} J_\rho(\zeta) = \frac{\rho^\rho}{e^\rho \Gamma(\rho + 1)} = \frac{[1]}{(2\pi\rho)^{1/2}} \,* \tag{44}$$

will be used as a basis for the identification of the function $J_\rho(\zeta)$.

* Cf. Watson, loc. cit., p. 40. The gamma function is evaluated by Stirling's formula; cf. Nielsen, *Handbuch der Theorie der Gammafunktion*, Leipzig, 1906, p. 96.

As $\zeta \to 0$, $z \to -\infty$ remaining either in the region I or in the region IV of Fig. 1. However, for z in the region I formulas (42) show that

$$\left(\frac{e\zeta}{2\rho}\right)^{-\rho} \sim e^{i\xi}, \quad \phi(z) \sim i,$$

and the corresponding value of ξ lies in those parts of the regions $\Xi^{(1)}$ or $\Xi^{(2)}$ in which $\exp\{i\xi\}$ approaches no limit as $|\xi| \to \infty$. Similarly, for z in the region IV,

$$\left(\frac{e\zeta}{2\rho}\right)^{-\rho} \sim e^{-i\xi}, \quad \phi(z) \sim -i,$$

and in this case $\exp\{-i\xi\}$ approaches no limit as $|\xi| \to \infty$. The substitution of the identity (43) into (44) yields in these cases respectively

$$\frac{[1]}{(2\pi\rho)^{1/2}} = \lim_{|\xi| \to \infty} \begin{cases} C_{h,1}e^{i\xi}u_{h,1}(z) + C_{h,2}e^{i\xi}u_{h,2}(z), & \text{for } z \text{ in region I}, \\ C_{l,1}e^{-i\xi}u_{l,1}(z) + C_{l,2}e^{-i\xi}u_{l,2}(z), & \text{for } z \text{ in region IV}, \end{cases}$$

and the use of the formulas (21) leads to the conclusion that

$$C_{h,1} = 0, \qquad C_{h,2} = \frac{e^{\pi i/4}[1]}{(2\pi)^{1/2}\rho^{1/3}}, \text{ when } h \text{ is } 1 \text{ or } 2,$$

$$C_{l,1} = \frac{e^{-\pi i/4}[1]}{(2\pi)^{1/2}\rho^{1/3}}, \qquad C_{l,2} = 0, \text{ when } l \text{ is } -2 \text{ or } -1.$$

These results serve to identify the function $J_\rho(\zeta)$ which may accordingly be described by either of the formulas

$$J_\rho(\zeta) = \begin{cases} \dfrac{e^{\pi i/4}[1]}{(2\pi)^{1/2}\rho^{1/3}} u_{h,2}(z), & h = 1, 2, \\ \dfrac{e^{-\pi i/4}[1]}{(2\pi)^{1/2}\rho^{1/3}} u_{l,1}(z), & l = -2, -1. \end{cases} \tag{45}$$

In the identities

$$H_\rho^{(j)}(\zeta) \equiv C_{k,1}^{(j)}u_{k,1}(z) + C_{k,2}^{(j)}u_{k,2}(z), \tag{46}$$

the coefficients may be determined in a manner similar to that above upon the basis of the relations

$$\lim_{|\zeta|\to\infty} \zeta^{1/2} e^{\mp i(\zeta-\rho\pi/2)} H_\rho{}^j(\zeta) = \left(\frac{2}{\pi}\right)^{1/2} e^{\mp \pi i/4},^* \tag{47}$$

when $|\zeta|\to\infty$, $z\to\infty$ remaining in the regions II or III, while the formulas (42) show that for such values

$$\zeta - \rho\pi/2 \sim \xi, \quad \zeta \sim \rho\phi(z).$$

Hence the substitution of (46) into (47) results in the relations

$$\left(\frac{2}{\pi}\right)^{1/2} e^{\mp \pi i/4} = \lim_{\xi\to\infty} \left\{C_{k,1}^{(j)} e^{\mp i\xi} \rho^{1/2} \phi^{1/2}(z) u_{k,1}(z) + C_{k,2}^{(j)} e^{\mp i\xi} \rho^{1/2} \phi^{1/2}(z) u_{k,2}(z)\right\}. \tag{48}$$

Now z may be chosen so that ξ remains in those parts of the regions $\Xi^{(0)}$ and $\Xi^{(1)}$ in which $\exp\{-i\xi\}$ approaches no limit. With the upper signs in (48) it must accordingly be concluded that

$$C_{p,1}^{(1)} = \frac{2e^{-\pi i/4}[1]}{(2\pi)^{1/2}\rho^{1/3}}, \quad C_{p,2}^{(1)} = 0, \text{ with } p \text{ either } 0 \text{ or } 1.$$

On the other hand, z may be chosen so that ξ lies in those parts of the regions $\Xi^{(-1)}$ or $\Xi^{(0)}$ in which $\exp\{i\xi\}$ approaches no limit, and in that case formula (48) with the lower signs implies that

$$C_{q,1}^{(2)} = 0, \quad C_{q,2}^{(2)} = \frac{2e^{\pi i/4}[1]}{(2\pi)^{1/2}\rho^{1/3}}, \text{ with } q \text{ either } -1 \text{ or } 0.$$

The relations (46) thus reduce to the formulas

$$\begin{aligned} H_\rho^{(1)}(\zeta) &= \frac{2e^{-\pi i/4}[1]}{(2\pi)^{1/2}\rho^{1/3}} u_{p,1}(z), \quad p = 0, 1, \\ H_\rho^{(2)}(\zeta) &= \frac{2e^{\pi i/4}[1]}{(2\pi)^{1/2}\rho^{1/3}} u_{q,2}(z), \quad q = -1, 0, \end{aligned} \tag{49}$$

and with the identifications of $J_\rho(\zeta)$ and $H_\rho^{(j)}(\zeta)$ thus accomplished, the asymptotic forms of these functions are easily computed from the formulas (31) and (32). With the use of the abbreviation

$$g = \left(\frac{2}{\pi\rho\phi(z)}\right)^{1/2},$$

the results of this computation for the various regions $\Xi^{(i)}$ are shown in the following tabulation:

* These relations are evident, for instance, from the integral representations for the functions $H_\rho^{(j)}(\zeta)$. Cf. Watson, p. 168.

(50)

	$J_\rho(\zeta)$	$H_\rho^{(1)}(\zeta)$	$H_\rho^{(2)}(\zeta)$
$\Xi^{(-2)}$	$\frac{g}{2}e^{i(\xi-\pi/4)}$	$-ge^{-i(\xi-\pi/4)}$	$g\{e^{i(\xi-\pi/4)}+e^{-i(\xi-\pi/4)}\}$
$\Xi^{(-1)}$	$\frac{g}{2}e^{i(\xi-\pi/4)}$	$g\{e^{i(\xi-\pi/4)}-e^{-i(\xi-\pi/4)}\}$	$ge^{-i(\xi-\pi/4)}$
$\Xi^{(0)}$	$\frac{g}{2}\{e^{i(\xi-\pi/4)}+e^{-i(\xi-\pi/4)}\}$	$ge^{i(\xi-\pi/4)}$	$ge^{-i(\xi-\pi/4)}$
$\Xi^{(1)}$	$\frac{g}{2}e^{-i(\xi-\pi/4)}$	$ge^{i(\xi-\pi/4)}$	$g\{-e^{i(\xi-\pi/4)}+e^{-i(\xi-\pi/4)}\}$
$\Xi^{(2)}$	$\frac{g}{2}e^{-i(\xi-\pi/4)}$	$g\{e^{i(\xi-\pi/4)}+e^{-i(\xi-\pi/4)}\}$	$-ge^{i(\xi-\pi/4)}$

The sections which follow are devoted to the geometric determination of the regions in the strip of Fig. 1.

15. **The regions $\Xi^{(h)}$ for arg ρ fixed.** When the value arg ρ is constant the relative orientation of the surfaces R_ξ and R_Φ is fixed, and since the regions $\Xi^{(h)}$ are bounded on R_ξ by radial straight lines they are also bounded by such lines on the surface R_Φ. From the formulas (41) these lines are found to be given by the equation

$$\Xi^{(h)}: \quad \begin{aligned} \arg \Phi &= (h-1)\pi + \epsilon - \arg \rho, \\ \arg \Phi &= (h+1)\pi - \epsilon - \arg \rho. \end{aligned} \tag{51}$$

The lines (51) are in turn to be mapped upon the plane of the variable z. The construction of the resulting curves is facilitated if the following simple facts are first observed. The curve on R_z which corresponds to the general radial line arg $\Phi=\alpha$ (α a constant) issues from the origin at the inclination $2\alpha/3$. If, on the one hand, the line extends into the regions II or III of Fig. 2, the curve approaches the line $\mathfrak{I}(z)=\alpha$ as an asymptote, when $\mathfrak{R}(z)\to\infty$. This may be seen readily from the fact that formula (42a) gives $z\sim \log(\Phi+\pi/2)$, whereas on the line in question arg $(\Phi+\pi/2)$ approaches α. If, on the other hand, the line extends into the region I (or IV) it meets each of the two lines $\mathfrak{R}(\Phi)=-\pi/2$, and $\mathfrak{R}(\Phi)=-\pi$ at the angle $\alpha-\pi/2$ (or $\alpha+\pi/2$), and due to the conformality of the map the curve in R_z meets each of the two corresponding lines, $\mathfrak{I}(z)=\pi/2$, and $\mathfrak{I}(z)=\pi$, at the same angle $\alpha-\pi/2$ (or the lines $\mathfrak{I}(z)=-\pi/2$, $\mathfrak{I}(z)=-\pi$, at the angle $\alpha+\pi/2$). These facts apply directly to the various lines (51) and the configuration of regions $\Xi^{(h)}$ in R_z is thus easily determined. The sub-division of R_z for a case in which

arg $\rho>0$ is shown in Fig. 3. The configuration for a case in which arg $\rho<0$ is obtainable from Fig. 3 by reflecting it in the axis of reals and changing the indices of the several regions $\Xi^{(h)}$ to their negatives.

The functions $J_\rho(\zeta)$ and $H_\rho^{(j)}(\zeta)$ are represented asymptotically for a value in any one of the regions by the formulas associated with that region by the table (50). If z lies in a region designated as belonging to two regions $\Xi^{(h)}$ either associated set of formulas may be used, and the transition from one set to the other may be made at pleasure, inasmuch as the formulas in question are asymptotically equivalent in the region concerned.

The general asymptotic forms of Part I were deduced upon the assumption that $|\rho|$ and $|\xi|$ were sufficiently large. This condition interpreted for the case in hand by means of the formulas (40) and (41) is found to impose the same requirement upon the quantities $|\rho|$ and $|z\rho^{2/3}|$. The forms of table (50) are, therefore, not valid in the immediate vicinity of the origin of Fig. 3, the linear dimensions of the excluded neighborhood depending upon $|\rho|$ and being of the order of $O(|\rho|^{-2/3})$.

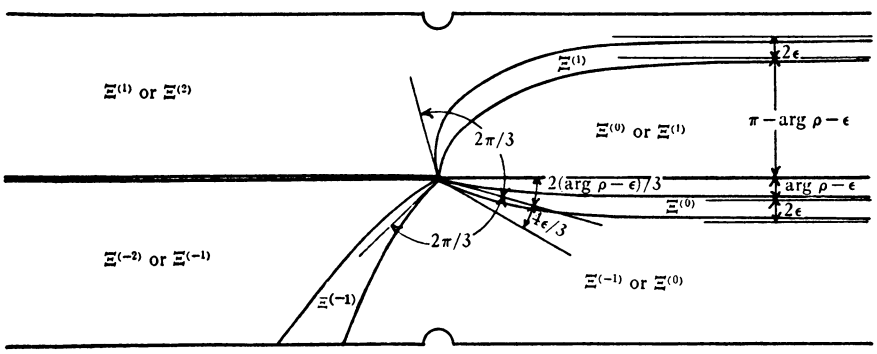

Fig. 3. R_z (arg $\rho>0$)

For the functions under consideration the immediate variables are ζ and ρ, and it is evident that most ready application of the results may be made if they are formulated directly in terms of these variables and their ratio. Let $\omega=\zeta/\rho$. The map of R_z upon the ω plane is of elementary form. It is facilitated, moreover, by the relation $\omega-\pi/2\sim\Phi$, which follows from (42a) and shows that the remote part of the ω plane is obtainable asymptotically by a translation of the regions II and III of the surface R_Φ. Fig. 4 corresponds in this way to Fig. 3, and in conjunction with it the asymptotic forms are found to be applicable except in a neighborhood of the point $\omega=1$ whose linear dimensions are of the order $O(|\rho|^{-2/3})$.

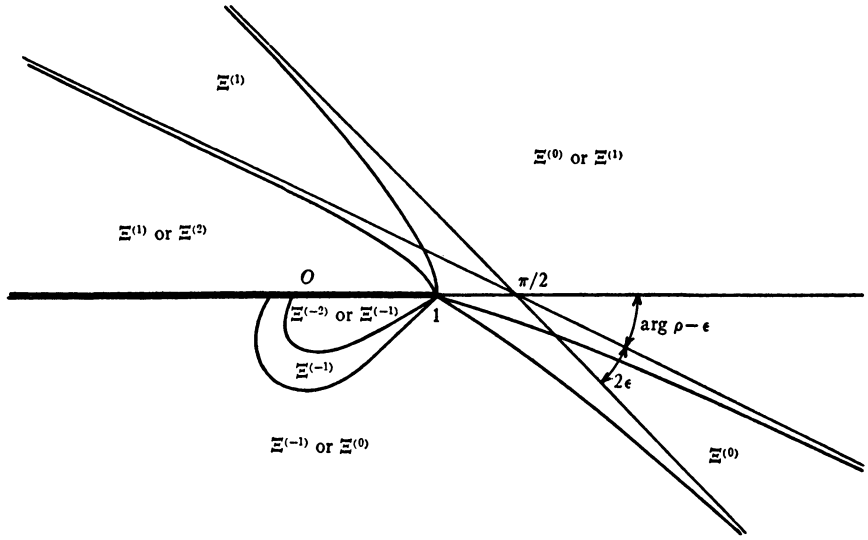

Fig. 4. $\omega=\zeta/\rho$ (arg $\rho>0$)

In this latter connection it may also be observed that the quantities involved in the formulas of table (50) are expressible in terms of ζ and ρ precisely by the formulas

$$\begin{aligned} \xi &= (\zeta^2 - \rho^2)^{1/2} - \rho \sec^{-1}(\zeta/\rho), \\ \phi &= (\zeta^2 - \rho^2)^{1/2}/\rho, \end{aligned} \tag{52}$$

and asymptotically by the relations

$$\begin{aligned} &\xi \sim \zeta - \rho\pi/2,\ \phi \sim \zeta/\rho, \text{ when } |\zeta/\rho| \text{ is large}, \\ &\xi \sim i\rho \log(e\zeta/(2\rho)),\ \phi \sim i, \text{ when } |\zeta/\rho| \text{ is small and } \arg(\zeta/\rho) > 0, \\ &\xi \sim -i\rho \log(e\zeta/(2\rho)),\ \phi \sim -i, \text{ when } |\zeta/\rho| \text{ is small and } \arg(\zeta/\rho) < 0. \end{aligned} \tag{53}$$

16. The regions $\Xi^{(h)}$ for arg ζ fixed. When arg ζ is fixed and arg ρ is accordingly variable the relative orientation of the surfaces R_ξ and R_Φ varies with the value of arg ρ. The boundaries of the regions $\Xi^{(h)}$ as seen upon R_Φ are, therefore, curvilinear. Their equations as deduced from (33) are found to be expressible with the use of $\mathfrak{I}(z)$ as a parameter in the form

$$\Xi^{(h)}: \quad \begin{aligned} \arg \Phi &= (h-1)\pi + \epsilon - \arg\zeta + \mathfrak{I}(z), \\ \arg \Phi &= (h+1)\pi - \epsilon - \arg\zeta + \mathfrak{I}(z). \end{aligned} \tag{54}$$

The loci upon R_Φ along which $\mathfrak{I}(z)$ has a given constant value are known, having been discussed in §12. With their use any curve of the type (54), i.e.,

$$\arg \Phi = \beta + \mathfrak{I}(z),$$

with β a constant, is readily plotted. It issues from the origin $\Phi=0$ at the inclination β, and if $0 \leqq \beta < \pi/2$ it meets the lines $\mathcal{R}(\Phi) = -\pi/2$ and $\mathcal{R}(\Phi) = -\pi$, at the points for which $\arg \Phi = \beta + \pi/2$ and $\arg \Phi = \beta + \pi$, respectively.

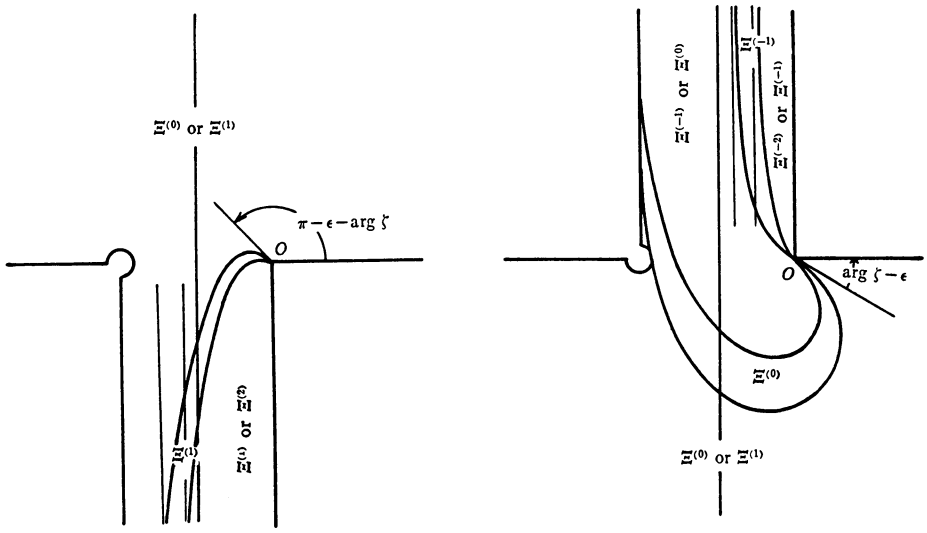

Fig. 5. R_Φ ($\arg \zeta > 0$)

If $\pi/2 \leqq \beta \leqq 3\pi/2$ the curve approaches the line $\mathcal{R}(\Phi) = -(3\pi/2 - \beta)$ as an asymptote in the region I of Fig. 2. Finally, if $\beta < 0$ the curve is obtainable by reflecting that for the corresponding positive value in the axis of reals. The resulting sub-division of the surface R_Φ is shown for a typical case in which $\arg \zeta > 0$ in Fig. 5 and the corresponding division of the strip R_z is indicated in Fig. 6. As in the earlier case the asymptotic forms are applicable except in the neighborhood of $z=0$.

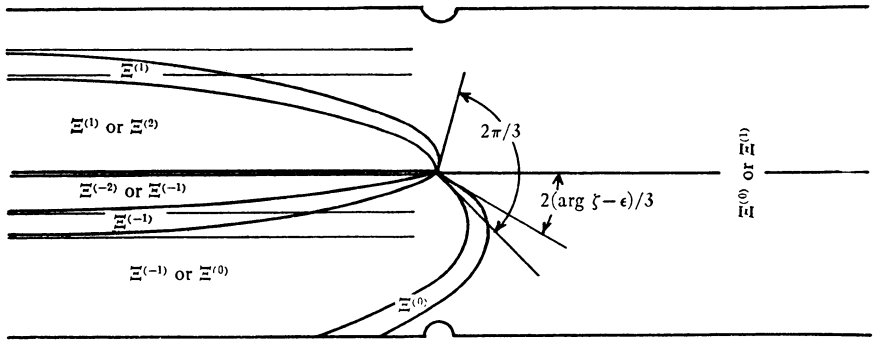

Fig. 6. R_z ($\arg \zeta > 0$)

17. A comparison with existing formulas. The asymptotic forms of the various Bessel functions for configurations of values such as are admitted in §16 were derived by Debye* by use of the method of steepest descent applied to the integral representations of the functions concerned. The great effectiveness of that method for this purpose is, of course, well known. Unfortunately it is not applicable when suitable integral representations of the functions to be discussed do not exist. In view of the total dissimilarity of the derivations a brief comparison of the results of §16 and those of Debye's memoir might be of interest.

The formula

$$\rho/\zeta = \cos\tau, \quad 0 \leqq \tau' < \pi, \tag{55}$$

defines the complex variable $\tau(=\tau'+i\tau'')$, and through the consequent relation

$$\cos\tau = e^{-z},$$

maps the strip R_z of Figs. 1 and 6 upon a strip of the τ plane. This is shown in Fig. 7a with the configurations corresponding to those of Fig. 6, and is to be

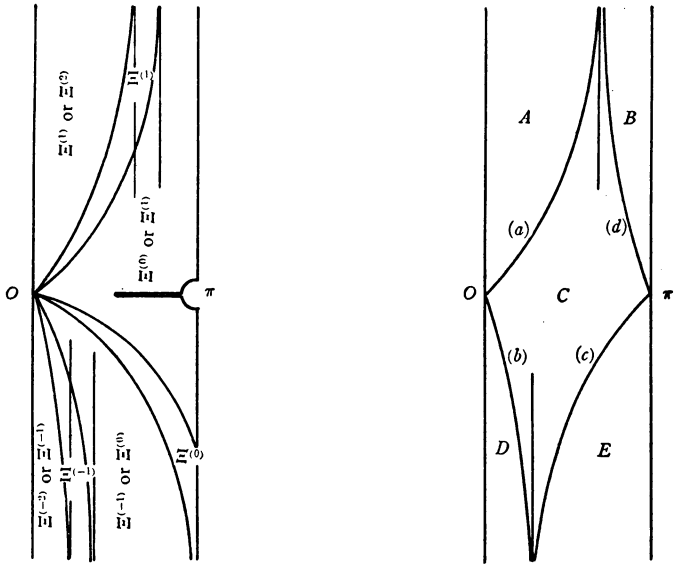

(a) Fig. 7 (b)

* Debye, P., *Semikonvergente Entwickelungen für die Zylinderfunktionen*, etc., Münchener Berichte, 1910, No. 5. The discussion is elaborated in Watson, loc. cit., p. 262.

compared with the Fig. 7b which occurs in the paper of Debye. It will be found that the evident difference in the modes of sub-division of the strip is due to two causes: first, to the fact that the one figure, but not the other, gives regions in which the associated forms are uniformly valid, and, second, to the fact that different determinations of multiple-valued functions are to some extent involved.

The curves (a) and (b) of the Fig. 7b are described as given by the equation

$$\mathcal{R}\left(ix\left\{\sin\tau - \frac{\alpha}{x}\tau\right\}\right) = 0, \tag{56}$$

in which

$$\frac{\alpha}{x} = \cos\tau, \tag{57}$$

and the curves (c) and (d) are respectively the reflections of (a) and (b) in the point $\tau = \pi/2$. For the region A the formula

$$H_\alpha^{(2)}(x) \sim \frac{i\Gamma(\frac{1}{2})}{\pi\left\{\frac{-ix}{2}\sin\tau\right\}^{1/2}} e^{ix(\sin\tau - \tau\cos\tau)} \tag{58a}$$

is given, and for the regions B, C, D,

$$H_\alpha^{(2)}(x) \sim \frac{\Gamma(\frac{1}{2})e^{\pi i/4}}{\pi\left\{\frac{x}{2}\sin\tau\right\}^{1/2}} e^{-ix(\sin\tau - \tau\cos\tau)}. \tag{58b}$$

The roots involved are specified as those which are real and positive for $\arg x = 0$, $\arg\tau = \pi/2$. This pair of values x, τ is associated by (57) with $\arg\alpha = 0$, and since values admitted in §16 are thereby obtained, the identifications

$$\alpha = \rho, \quad x = \zeta$$

may be made. The formulas

$$\xi = \zeta(\sin\tau - \tau\cos\tau),$$

$$\phi(z) = \tan\tau$$

follow readily from formulas (52) and (55), and the curves (56) are thereby identified as given by the equation $\mathcal{R}(i\xi) = 0$, namely,

$$\arg\Phi = m\pi - \arg\rho.$$

They may, therefore, be described as, in an obvious sense, the medians of the regions designated in Fig. 7a by $\Xi^{(1)}$ and $\Xi^{(-1)}$.

The change of notation gives to the formulas (58a) and (58b) respectively the forms represented by the upper and lower signs in the relation

$$H_\rho^{(2)}(\zeta) = \mp \left\{\frac{2}{\pi\rho\phi(z)}\right\}^{1/2} e^{\pm i(\xi-\pi/4)}. \tag{58c}$$

Except in the region which comprises the immediate neighborhood of the curve (a) these are the formulas given also by the table (50). For the omitted region $\Xi^{(1)}$, however, the table describes the function as represented by the sum of the two expressions (58c), a fact to be expected in virtue of the uniform validity of the representations of the table. Neither of the formulas (58a), (58b) remains valid when the curve (a) is too closely approached.

The verification of the formula

$$H_\alpha^{(2)}(x) \sim \frac{i\Gamma(\frac{1}{2})e^{2\pi ix\cos\tau}}{\left\{\dfrac{-ix}{2}\sin\tau\right\}^{1/2}} e^{ix(\sin\tau-\tau\cos\tau)} \tag{59}$$

for the region E is not so direct. The root in (59) is specified as real and positive when $\arg x=0$ and τ lies on the line $\tau'=\pi$, $\tau''<0$. These values correspond to $\arg\alpha=\pi$, and due to the restriction (37) the identification must be made through the relations

$$\alpha = \rho e^{\pi i}, \quad x = \zeta e^{\pi i}. \tag{60}$$

The change of notation gives to formula (59) the form

$$H_\alpha^{(2)}(x) \sim \left\{\frac{2}{\pi\rho\phi(z)}\right\}^{1/2} e^{-2\pi i\rho} e^{-i(\xi-\pi/4)}. \tag{59a}$$

On the other hand, the values (60) substituted into (36) and (38) yield the formula

$$H_\alpha^{(2)}(x) = \{1 - e^{-2\pi i\rho}\} H_\rho^{(2)}(\zeta) + H_\rho^{(1)}(\zeta). \tag{61}$$

Since Fig. 7a is drawn for a case in which $\arg\zeta>0$, whereas for the case in hand $\arg\zeta=-\pi$, the figure is not adapted to show the region $\Xi^{(h)}$ which contains the values τ of the region E. It is readily found, however, from an appropriate figure that these values lie in $\Xi^{(-1)}$ or $\Xi^{(-2)}$ and, moreover, in such portions of these regions within which $\exp\{i\xi\}$ is asymptotically negligible. With this fact established the table (50) is found to give for the expression (61) a form asymptotically equivalent to (59a). The agreement of

the results of §16 with the standard formulas for $H_\rho^{(2)}(\zeta)$ is thus evident. The formulas obtained for $H_\rho^{(1)}(\zeta)$ may be verified in similar manner, but inasmuch as Debye's Fig. 7b does not apply to this function the discussion above would essentially have to be repeated.

18. **The regions $\Xi^{(h)}$ for $\arg\zeta$ and $\arg\rho$ both variable.** The free variation of $\arg\rho$ over the range (37) restricts the independent variation of $\arg\zeta$ under (39) to the values

$$-\pi/2 \leqq \arg\zeta < \pi/2. \tag{62}$$

However, since the formulas (38) nevertheless suffice to extend the results to all values of $\arg\zeta$ the restriction (62), which will be assumed throughout this section, involves no loss of generality. The following considerations serve to determine a division of the strip R_z into regions to which the formulas of the table (50) are applicable irrespective of the values of $\arg\rho$ and $\arg\zeta$.

The inequalities (37) imply the relations

$$-\pi/2 + \arg\Phi \leqq \arg\xi \leqq \pi/2 + \arg\Phi,$$

and from these together with (33) it is evident that all values of the variable admitted by the inequalities

$$(h - \tfrac{1}{2})\pi + \epsilon \leqq \arg\Phi \leqq (h + \tfrac{1}{2})\pi - \epsilon \tag{63}$$

assuredly lie within the region $\Xi^{(h)}$. On the other hand, the evaluation

$$\arg\rho = \arg\zeta - \mathfrak{I}(z)$$

when substituted into (33) yields the restriction

$$(h - 1)\pi + \epsilon \leqq \arg\zeta + \arg\Phi - \mathfrak{I}(z) \leqq (h + 1)\pi - \epsilon,$$

and in view of (62) it follows that the region $\Xi^{(h)}$ includes all values of the variable admitted by the relation

$$(h - \tfrac{1}{2})\pi + \epsilon + \mathfrak{I}(z) \leqq \arg\Phi \leqq (h + \tfrac{1}{2})\pi - \epsilon + \mathfrak{I}(z). \tag{64}$$

The inequalities (63) and (64) permit the conclusion that in the part of R_Φ shown on the left of Fig. 2, and corresponding to $\mathfrak{I}(z) \geqq 0$, the curves

$$\begin{aligned} \arg\Phi &= (h + \tfrac{1}{2})\pi - \epsilon + \mathfrak{I}(z), \\ \arg\Phi &= (h - \tfrac{1}{2})\pi + \epsilon, \end{aligned} \tag{65a}$$

in so far as they fall upon the part of R_Φ in question, delimit a portion of the region $\Xi^{(h)}$. Upon the part of R_Φ corresponding to $\mathfrak{I}(z) < 0$ the analogous curves are

$$\begin{aligned} \arg\Phi &= (h + \tfrac{1}{2})\pi - \epsilon, \\ \arg\Phi &= (h - \tfrac{1}{2})\pi + \epsilon + \mathfrak{I}(z). \end{aligned} \tag{65b}$$

The formulas (65a) and (65b) represent only curves of types already considered in connection with the equations (51) and (54) and hence need not be further discussed. It is found that the sub-division of the strip R_z is as shown in Fig. 8.

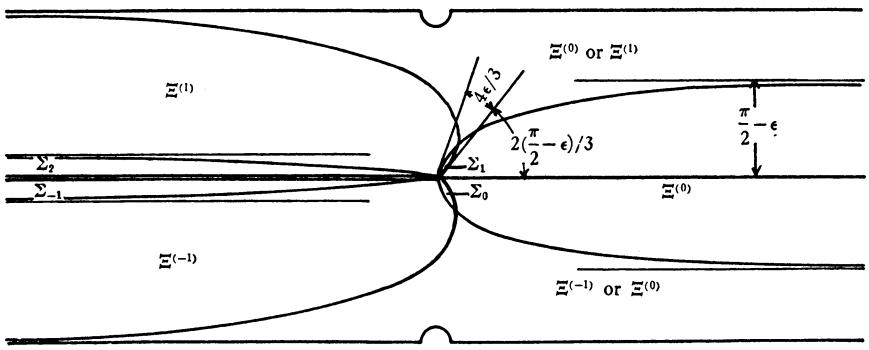

Fig. 8. R_z

For values of z in the regions designated in the figure by the usual symbols the asymptotic forms may be taken, in the manner now familiar, from the table (50) irrespective of the values or variations of $\arg \rho$ or $\arg \zeta$ subject to the stated restrictions. The regions designated by the symbols Σ_h, on the other hand, are peculiar. They arise from the requirement that the formulas be uniformly valid in the respective regions, and depend in magnitude upon the constant ϵ, disappearing as $\epsilon \to 0$, i.e., as the requirement of uniformity is relinquished. Within such a region the values of z do not remain in any one of the regions $\Xi^{(h)}$ for all values of $\arg \rho$ admitted by the relation (37). It is easily ascertained, however, by a reference to the figures that

$$\Sigma_h \text{ lies in } \Xi^{(h-1)}, \text{ when } -\pi/2 \leqq \arg \rho \leqq \pi/2 - 2\epsilon,$$

$$\Sigma_h \text{ lies in } \Xi^{(h)}, \quad \text{when } -\pi/2 + 2\epsilon \leqq \arg \rho < \pi/2.$$

For all intermediate ranges of $\arg \rho$ the values in question may, therefore, be considered with those of either abutting region.

19. **The formulas for intermediate and small values of $|\xi|$.** The various asymptotic forms were observed in the course of the preceding discussion to be inapplicable in the regions for which $|\xi|$ is of moderate magnitude or small, namely, for such values of the variables as fulfill the relations

$$(66) \qquad \begin{aligned} |z| &= O(|\rho|^{-2/3}), \\ |\zeta/\rho - 1| &= O(|\rho|^{-2/3}). \end{aligned}$$

If $|\rho|$ is large the character of the functions in question may nevertheless be determined from the formulas deduced in Part I.

The respective Bessel functions concerned were identified in terms of solutions $u_{k,j}(z)$ by the formulas (45) and (49). These solutions, on the other hand, are described irrespective of the magnitude of $|\xi|$ in the appropriate formulas of Theorem 6. The substitution of the forms (30) into the relations (45) and (49) is evidently all that is required, and yields in fact the resulting formulas

$$
\begin{aligned}
J_\rho(\zeta) &= \left(\frac{\Phi}{3\phi}\right)^{1/2}\{J_{-1/3}(\xi) + J_{1/3}(\xi)\} + \frac{E(\zeta, \rho)}{\rho^{4/3}}, \\
H_\rho^{(1)}(\zeta) &= 2\left(\frac{\Phi}{3\phi}\right)^{1/2}\{e^{-\pi i/3}J_{-1/3}(\xi) + e^{\pi i/3}J_{1/3}(\xi)\} + \frac{E(\zeta, \rho)}{\rho^{4/3}}, \qquad (67) \\
H_\rho^{(2)}(\zeta) &= 2\left(\frac{\Phi}{3\phi}\right)^{1/2}\{e^{\pi i/3}J_{1/3}(\xi) + e^{-\pi i/3}J_{1/3}(\xi)\} + \frac{E(\zeta, \rho)}{\rho^{4/3}}.
\end{aligned}
$$

It may, moreover, be observed that for use in these formulas the evaluations

$$
\xi \sim \frac{(\zeta^2 - \rho^2)^{3/2}}{3\rho^2},
$$

$$
\left(\frac{\Phi}{3\phi}\right)^{1/2} \sim \frac{(\zeta^2 - \rho^2)^{1/2}}{3\rho}
$$

are permissible inasmuch as they are directly deducible from the relations (66).

In conclusion, if the value $|\xi|$ is actually small, convenient series are obtained for the functions concerned by substituting in the relations (67) the familiar expansions of the functions $J_{\mp 1/3}(\xi)$. These series as well as the formulas (67) are given in [L §§14, 15] where some discussion of them may be found.

University of Wisconsin,
Madison, Wis.