TRANSACTIONS OF THE
AMERICAN MATHEMATICAL SOCIETY
Volume 360, Number 11, November 2008, Pages 5853–5868
S 0002-9947(08)04623-0
Article electronically published on May 28, 2008

TWISTED FIBER SUMS OF FINTUSHEL-STERN'S KNOT SURGERY 4-MANIFOLDS

KI-HEON YUN

ABSTRACT. In the article, we study Fintushel-Stern's knot surgery four-manifold $E(n)_K$ and its monodromy factorization. For fibered knots we provide a smooth classification of knot surgery 4-manifolds up to twisted fiber sums. We then show that other constructions of 4-manifolds with the same Seiberg-Witten invariants are in fact diffeomorphic.

1. INTRODUCTION

In 1994, Seiberg-Witten invariants were introduced, and we have experienced significant progress in four dimensional topology. But a classification of smooth 4-manifolds is still out of reach. Several examples of four dimensional manifolds with infinitely many exotic smooth structures have been constructed by various authors. Underlying many of these constructions is Fintushel-Stern's knot surgery [FS98b].

Let X be a closed smooth 4-manifold which has a c-imbedded torus T and $K \subset S^3$ be a knot. Then *Fintushel-Stern's knot surgery* 4*-manifold* is defined by

$$X_K = X \sharp_{T=T_m} M_K \times S^1$$

where M_K is the 3-manifold obtained by doing 0-surgery along K, m is the meridian of K and $T_m = m \times S^1$. The Seiberg-Witten invariants of X_K are given by

$$\mathcal{SW}_{X_K} = \mathcal{SW}_X \cdot \Delta_K(t)$$

where $t = \exp(2[T])$ and $\Delta_K(t)$ is the symmetrized Alexander polynomial of the knot K [FS98b]. By using this method, R. Fintushel and R. Stern could construct infinitely many nondiffeomorphic symplectic and nonsymplectic 4-manifolds in the same homeomorphism class. During the ICM 1998, they proposed the following conjecture:

Conjecture 1.1 ([FS98a])**.** *For $X = E(2)$ and T the elliptic fiber of $E(2)$, the manifolds X_{K_1} and X_{K_2} are diffeomorphic if and only if K_1 and K_2 are equivalent knots.*

Here $E(n)$ is the simply connected elliptic surface without multiple fibers and which has holomorphic Euler characteristic n, or equivalently, Euler characteristic $12n$.

In [Akb02] S. Akbulut showed that for any knot K , X_K is diffeomorphic to X_{K^*} where K^* is the mirror to K. So the question remains whether X_K determines K

Received by the editors October 2, 2006.
2000 *Mathematics Subject Classification.* Primary 57N13, 57R17, 53D35.
This work was supported by Grant No. R14-2002-007-01002-0 from KOSEF.

up to its mirror. This is one of the most interesting unsolved problems in four dimensional topology. The difficulty of this conjecture comes from the fact that there are infinitely many inequivalent knots with the same Alexander polynomial. Moreover for any given monic integral symmetric Laurent polynomial which has Laurent degree at least 4 and evaluates to a unit at 1, we can construct infinitely many inequivalent fibered knots which share the same Laurent polynomial as their symmetrized Alexander polynomial [Mor83]. We cannot distinguish such $E(n)_K$'s in a smooth category by using Seiberg-Witten invariants only and we need a new method to classify them.

If $K \subset S^3$ is a fibered knot and the torus T is symplectically embedded in a symplectic 4-manifold X, then Fintushel-Stern's knot surgery 4-manifold X_K also has a symplectic structure. Moreover a Lefschetz fibration structure on $E(n)_K$ was found by R. Fintushel and R. Stern [FS04] as a twisted fiber sum of two copies of $M(n,g)$ (Definition 2.8) as a genus $(2g+n-1)$ Lefschetz fibration over S^2. A twisted fiber sum (Definition 2.6) of two genus g Lefschetz fibrations X_1 and X_2 with monodromy factorization W_1 and W_2 with respect to a fixed generic fiber Σ_g, denoted $X_1 \sharp_\psi X_2$, is the genus g Lefschetz fibration $(X_1 \setminus \nu(\Sigma_g)) \cup_{r\times\psi} (X_2 \setminus \nu(\Sigma_g))$ with monodromy factorization $\psi(W_2)\cdot W_1$ where $r : S^1 \to S^1$ is an orientation reversing diffeomorphism and $\psi : \Sigma_g \to \Sigma_g$ is an orientation preserving diffeomorphism. An explicit monodromy factorization of $M(n,g)$ ([Gur], [Yun06]) together with this Lefschetz fibration structure of $E(n)_K$ gives an explicit monodromy factorization of $E(n)_K$. In the case of fibered knots we will use this factorization to prove the following stabilization of any Fintushel-Stern's knot surgery 4-manifold.

Theorem 1.2. *Let K_1, K_2 be any two genus $g \geq 2$ fibered knots in S^3 and let K_0 be the 2-bridge knot $C(\underbrace{-2,-2,\cdots,-2,-2}_{2g})$. Then*

$$E(n)_{K_1}\sharp_{t_{b_2}} E(n)_{K_0} \approx E(n)_{K_2}\sharp_{t_{b_2}} E(n)_{K_0}$$

for each fixed integer $n \geq 1$.

In the statement t_{b_2} means the right-handed Dehn twist along a simple closed curve b_2 as in Figure 3. This result can be compared to the stabilization of the Lefschetz fibration which was obtained by D. Auroux [Aur05]. In our case, we obtain a diffeomorphism by doing a twisted fiber sum with a Lefschetz fibration of genus $(2g+n-1)$ whose monodromy factorization has word length $4(4n+2g-2)$. It is usually much shorter than the word length of the monodromy factorization which was used by D. Auroux.

R. Fintushel and R. Stern have given other constructions of families of four-manifolds which have the same Seiberg-Witten invariants [FS04]. One of them is

$$Y(n;K_1,K_2) = E(n)_{K_1}\sharp_{id:\Sigma_{2g+n-1}\to\Sigma_{2g+n-1}} E(n)_{K_2}$$

where $K_1, K_2 \subset S^3$ are two genus g fibered knots and the surface Σ_{2g+n-1}, $n \geq 1$, is the generic fiber of the Lefschetz fibratons on $E(n)_{K_1}$ and $E(n)_{K_2}$ mentioned above. We are interested in whether the smooth type of $Y(n;K_1,K_2)$ determines the knot type of K_1 and K_2. In this article we show that the smooth type of $Y(n;K_1,K_2)$ does not always determine the knot type.

Theorem 1.3. *Let K_i, K_j be two 2-bridge knots of the form*

$$C(2\varepsilon_{i,1}, 2\varepsilon_{i,2}, \cdots, 2\varepsilon_{i,2g-1}, 2\varepsilon_{i,2g})$$

where $g \geq 1$ and $\varepsilon_{i,k} = +1$ or $\varepsilon_{i,k} = -1$ for each $k = 1, 2, \cdots, 2g$. Let K_0 be the 2-bridge knot of the form $C(\underbrace{-2, -2, \cdots, -2, -2}_{2g})$. Then for each $n \geq 1$, $Y(n; K_i, K_0) \approx Y(n; K_j, K_0)$.

2. Monodromy factorization of knot surgery 4-manifold

If K is a fibered knot in S^3, then $E(n)_K$ has a symplectic structure as well as a naturally defined Lefschetz fibration [FS04]. Any Lefschetz fibration is characterized by its monodromy factorization. In this section we will find an explicit monodromy factorization of Fintushel-Stern's knot surgery 4-manifold $E(n)_K$ and as an application we will show that some of S. Akbulut's examples [Akb02] can be obtained by using this monodromy factorization.

Definition 2.1. Let X be a compact, oriented smooth 4-manifold. A (smooth) Lefschetz fibration is a proper smooth map $\pi : X \to B$ where B is a compact connected oriented surface and $\pi^{-1}(\partial B) = \partial X$ such that

(1) the set of critical points $C = \{p_1, p_2, \cdots, p_n\}$ of π is nonempty and lies in $\mathrm{int}(X)$ and π is injective on C;
(2) about each p_i and $\pi(p_i)$, there are local complex coordinate charts agreeing with the orientations of X and B such that π can be expressed as $\pi(z_1, z_2) = z_1^2 + z_2^2$.

Let Σ_g be the closed connected orientable surface of genus g and let t_c be the right-handed Dehn twist along a simple closed curve c on Σ_g. A genus g Lefschetz fibration over $\mathbb{CP}^1$ with n critical values gives a factorization of the identity in the mapping class group

$$\mathcal{M}_g = \pi_0(\mathrm{Diff}^+(\Sigma_g))$$

as a product of n right-handed Dehn twists

$$t_{c_n} \circ t_{c_{n-1}} \circ \cdots \circ t_{c_2} \circ t_{c_1} = id$$

along simple closed curves $c_1, \cdots, c_n$ in Σ_g. The ordered sequence of right-handed Dehn twists

$$t_{c_n} \cdot t_{c_{n-1}} \cdot \ldots \cdot t_{c_2} \cdot t_{c_1}$$

is called *monodromy factorization* of the Lefschetz fibration. (We use $\circ$ when we consider it as an element of $\mathcal{M}_g$ or $\mathcal{M}_g^1 = \pi_0(\mathrm{Diff}^+(\Sigma_g^1))$ where Σ_g^1 is the connected orientable surface of genus g with one boundary component. We use $\cdot$ when we consider it as a monodromy factorization.)

For any element $f \in \mathcal{M}_g$ and a simple closed curve $c \subset \Sigma_g$,

$$f(t_c) = f \circ t_c \circ f^{-1} = t_{f(c)}.$$

Definition 2.2. Two monodromy factorizations W_1 and W_2 are *Hurwitz equivalent*, denoted by $W_1 \sim W_2$, if W_1 can be changed to W_2 in finitely many steps by using the following two operations:

(1) *Hurwitz move:* $t_{c_n} \cdot \ldots \cdot t_{c_{i+1}} \cdot t_{c_i} \cdot \ldots \cdot t_{c_1} \to t_{c_n} \cdot \ldots \cdot t_{c_{i+1}}(t_{c_i}) \cdot t_{c_{i+1}} \cdot \ldots \cdot t_{c_1}$,
(2) *inverse Hurwitz move:* $t_{c_n} \cdot \ldots \cdot t_{c_{i+1}} \cdot t_{c_i} \cdot \ldots \cdot t_{c_1} \to t_{c_n} \cdot \ldots \cdot t_{c_i} \cdot t_{c_i}^{-1}(t_{c_{i+1}}) \cdot \ldots \cdot t_{c_1}$.

The *simultaneous conjugation equivalence* of two monodromy factorizations is given by

$$t_{c_n} \cdot t_{c_{n-1}} \cdot \ldots \cdot t_{c_2} \cdot t_{c_1} \equiv f(t_{c_n}) \cdot f(t_{c_{n-1}}) \cdot \ldots \cdot f(t_{c_2}) \cdot f(t_{c_1})$$

for some $f \in \mathcal{M}_g$. We will consider $f(w_k \cdot \ldots \cdot w_2 \cdot w_1)$ as $f(w_k) \cdot \ldots \cdot f(w_2) \cdot f(w_1)$.

Definition 2.3. Two Lefschetz fibrations $f : M \to B$, $f' : M' \to B'$ are *isomorphic* if there are orientation preserving diffeomorphisms $H : M \to M'$ and $h : B \to B'$ such that

$$\begin{array}{ccc} M & \xrightarrow{H} & M' \\ {\scriptstyle f}\downarrow & & \downarrow{\scriptstyle f'} \\ B & \xrightarrow{h} & B' \end{array}$$

commutes, *i.e.* $f' \circ H = h \circ f$.

Theorem 2.4 ([Kas80], [Mat96])**.** *Let $X_i \to \mathbb{CP}^1$, $i = 1, 2$, be Lefschetz fibrations of genus g with monodromy factorization W_i corresponding to a fixed generic fiber F_i. Then the two Lefschetz fibrations are isomorphic if and only if W_1 can be changed to W_2 by a finite sequence of Hurwitz equivalences and simultaneous conjugation equivalences.*

Remark 2.5. If two monodromy factorizations W_1 and W_2 give the isomorphic Lefschetz fibration, then they are diffeomorphic as 4-manifolds and we will write $W_1 \approx W_2$. We will use the same notation $X_1 \approx X_2$ when two manifolds X_1 and X_2 are diffeomorphic.

Definition 2.6. Let X_i, $i = 1, 2$, be Lefschetz fibrations over $\mathbb{CP}^1$ with generic fiber $F_i \approx \Sigma_g$ and which have monodromy factorization $W_i = w_{i,n_i} \cdot \cdots \cdot w_{i,2} \cdot w_{i,1}$ corresponding to a fixed generic fiber F_i. Let $r : S^1 \to S^1$ be an orientation reversing diffeomorphism and $\psi : F_2 \to F_1$ be an orientation preserving diffeomorphism. Then the *twisted fiber sum* of two genus g Lefschetz fibrations, denoted $X_1 \sharp_\psi X_2$, is the genus g Lefschetz fibration

$$(X_1 \setminus \nu(F_1)) \cup_{r \times \psi} (X_2 \setminus \nu(F_2))$$

which has monodromy factorization $\psi(W_2) \cdot W_1$.

Remark 2.7. Consider the following diagram where $\phi_i : F_i \to \Sigma_g$ is an orientation preserving diffeomorphism:

$$\begin{array}{ccc} F_2 & \xrightarrow{\psi} & F_1 \\ {\scriptstyle \phi_2}\downarrow & & \downarrow{\scriptstyle \phi_1} \\ \Sigma_g & \xrightarrow[\phi_1 \circ \psi \circ \phi_2^{-1}]{} & \Sigma_g. \end{array}$$

Observe that $\psi(W_2) \cdot W_1 \in \mathcal{M}_{F_1}$ and $(\phi_1 \circ \psi \circ \phi_2^{-1})(\phi_2(W_2)) \cdot \phi_1(W_1) \in \mathcal{M}_{\Sigma_g}$ and these two can be identified via the following relation:

$$\mathcal{M}_{\Sigma_g} = \phi_1 \circ \mathcal{M}_{F_1} \circ \phi_1^{-1}$$

between two mapping class groups. So we may assume that W_1 and W_2 are elements of $\mathcal{M}_{\Sigma_g}$ by choosing Σ_g as a generic fiber. Usually $\psi_1(W_2) \cdot W_1$ is not isomorphic to $\psi_2(W_2) \cdot W_1$ for different choices of diffeomorphisms $\psi_i : \Sigma_g \to \Sigma_g$, $i = 1, 2$. Therefore to get a well-defined monodromy factorization of $X_1 \sharp_\psi X_2$, we

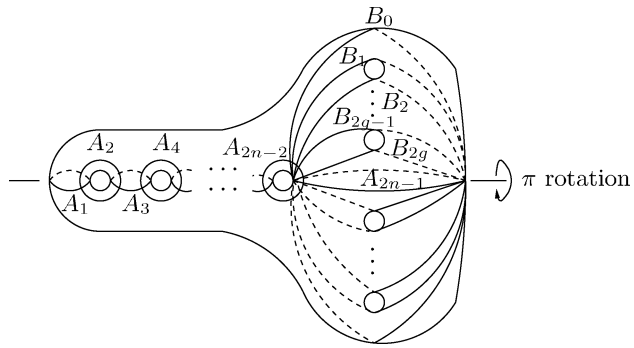

FIGURE 1. An involution and its vanishing cycles

have to specify a fixed generic fiber F_i of the Lefschetz fibration X_i and specify the identifying diffeomorphism $\psi : F_2 \to F_1$.

Definition 2.8 ([FS04])**.** Let $M(n,g)$ be the desingularization of the double cover of $\Sigma_g \times S^2$ branched over $2n(\{pt.\} \times S^2) \cup 2(\Sigma_g \times \{pt.\})$. Let $D(n,g)$ be the desingularization of the double cover of $\Sigma_g \times S^2$ branched over $2n(\{pt.\} \times S^2) \cup 4(\Sigma_g \times \{pt.\})$.

Remark 2.9. It is known that $M(n,g)$ is diffeomorphic to $(\Sigma_g \times S^2)\sharp 4n\overline{\mathbb{CP}}^2$ and $D(n,g)$ is diffeomorphic to $(\Sigma_g \times S^2)\sharp 8n\overline{\mathbb{CP}}^2$.

A Lefschetz fibration structure of a knot surgery 4-manifold $E(n)_K$ was studied by R. Fintushel and R. Stern [FS04] where $K \subset S^3$ is a fibered knot. The complex manifold $M(n,g)$ can be considered as a Lefschetz fibration with generic fiber Σ_{2g+n-1} because each of the two singular fibers of $M(n,g)$ is perturbed to $(4n+2g-2)$ node type singularities by local deformation. They considered $E(n)_K$ as a twisted fiber sum $M(n,g)\sharp_{\Phi_K} M(n,g)$ by using the diffeomorphism $\Phi_K = \varphi_K \oplus id \oplus id$ which is defined on $\Sigma_g \sharp \Sigma_{n-1} \sharp \Sigma_g$ where φ_K is the geometric monodromy of the fibered knot K.

Moreover we know an explicit monodromy factorization of $M(n,g)$.

Lemma 2.10 ([Yun06])**.** *$M(n,g)$ has monodromy factorization $\eta_{n-1,g}^2$ where*

$$\eta_{n-1,g} = t_{A_{2n-2}} \cdot t_{A_{2n-3}} \cdot \ldots \cdot t_{A_2} \cdot t_{A_1}^2 \cdot t_{A_2} \cdot \ldots \cdot t_{A_{2n-2}} \cdot t_{B_0} \cdot t_{B_1} \cdot \ldots \cdot t_{B_{2g}} \cdot t_{A_{2n-1}}$$

and A_i, B_j are simple closed curves on Σ_{n+2g-1} as in Figure 1.

This proposition combined with R. Fintushel and R. Stern's result gives an explicit monodromy factorization of $E(n)_K$.

Theorem 2.11. *Let $K \subset S^3$ be a fibered knot of genus g. Then $E(n)_K$ has a monodromy factorization of the form*

$$\Phi_K(\eta_{n-1,g}) \cdot \Phi_K(\eta_{n-1,g}) \cdot \eta_{n-1,g} \cdot \eta_{n-1,g}$$

where $\eta_{n-1,g}$ is as in Proposition 2.10 *and*

$$\Phi_K = \varphi_K \oplus id \oplus id : S\Sigma_g \sharp \Sigma_{n-1} \sharp \Sigma_g \to \Sigma_g \sharp \Sigma_{n-1} \sharp \Sigma_g$$

by using a (geometric) monodromy φ_K of the fibered knot K such that

$$S^3 \setminus \nu(K) = (I \times \Sigma_g^1)/((1,x) \sim (0, \varphi_K(x)))$$

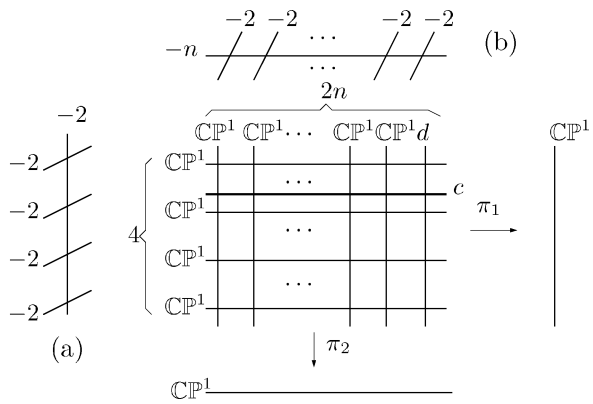

FIGURE 2. $E(n)$ as a Lefschetz fibration

where $g = genus(K)$ and Σ_g^1 is the connected orientable surface of genus g with one boundary component.

Proof. We will first recall R. Fintushel and R. Stern's construction in [FS04]. Let us consider $E(n)$ as the desingularization of the double cover of $\mathbb{CP}^1 \times \mathbb{CP}^1$ branched over $2n(\{pt.\} \times \mathbb{CP}^1) \cup 4(\mathbb{CP}^1 \times \{pt.\})$ as in Figure 2. Then we can easily get two fibrations: one corresponds to π_1 which has generic fiber Σ_{n-1} and 4 singular fibers of type (b). The other corresponds to π_2 with generic fiber $T^2 = \Sigma_1$ and $2n$ singular fibers of type (a). Therefore we get two different Lefschetz fibration structures for $E(n)$ by locally deforming each singular fiber to nodal type singular fibers. In particular, if we locally deform each singular fiber of type (b), then its monodromy is related to the hyperelliptic involution ω of Σ_{n-1}.

Now we will consider the Lefschetz fibration structure of $E(n)_K$ for some fibered knot K. Each Σ_{n-1} which comes from a 2-fold branched covering of the curve c in Figure 2 meets twice with the generic elliptic fiber T^2 of $E(n)$, which corresponds to the double cover of curve d, where we will do knot surgery. These two points are located in the same orbit of ω. When we do knot surgery, we remove two disks from Σ_{n-1} and replace them by two Σ_g^1, the fiber surface of

$$S^3 \setminus \nu(K) = (I \times \Sigma_g^1)/((1,x) \sim (0, \varphi_K(x))).$$

Therefore we may consider $E(n)_K$ as a singular fibration with generic fiber Σ_{2g+n-1} and which has 4 singular fibers of the same type. By locally deforming these 4 singular fibers, each singular fiber becomes $(4n + 2g - 2)$ node type singularities and its monodromy corresponds to an involution of $\Sigma_{2g+n-1} = \Sigma_g \sharp \Sigma_{n-1} \sharp \Sigma_g$ which is an extension of the hyperelliptic involution ω on Σ_{n-1}. One such monodromy factorization is given in Proposition 2.10. Now by closely investigating the monodromy map $\pi_1(S^2 \setminus \{4\ points\}) \to \mathcal{M}_{2g+n-1}$, we can decompose $E(n)_K$ as $(M(n,g) \setminus \nu(\Sigma_{2g+n-1})) \cup_{r \times \Phi_K} (M(n,g) \setminus \nu(\Sigma_{2g+n-1}))$ which depends on the choice of φ_K.

If $S^3 \setminus \nu(K) = (I \times F)/((1,x) \sim (0, \varphi(x)))$ for some other homeomorphism $\varphi : F \to F$, then there is a homeomorphism $\phi : \Sigma_g^1 \to F$ such that $\phi(\partial \Sigma_g^1) = \partial F$ respecting orientation and $\varphi = \phi \circ \varphi_K \circ \phi^{-1}$ (Proposition 5.10 of [BZ03]).

If η'^2 is another monodromy factorization of $M(n,g)$ as a genus $(2g+n-1)$ Lefschetz fibration which is isomorphic to $\eta^2_{n-1,g}$, then after Hurwitz moves and inverse Hurwitz moves we can find a diffeomorphism

$$\phi = \phi_1 \oplus \phi_2 \oplus \phi_3 : \Sigma_g \sharp \Sigma_{n-1} \sharp \Sigma_g \to \Sigma_{2g+n-1}$$

such that $\eta' = \phi^{-1}(\eta_{n-1,g})$. So

$$\begin{aligned} \Phi_K(\eta'^2)\cdot\eta'^2 &= \Phi_K(\phi^{-1}(\eta^2_{n-1,g}))\cdot\phi^{-1}(\eta^2_{n-1,g}) \\ &= \phi^{-1}((\phi\circ\Phi_K\circ\phi^{-1})(\eta^2_{n-1,g})\cdot\eta^2_{n-1,g}) \\ &\equiv (\phi\circ\Phi_K\circ\phi^{-1})(\eta^2_{n-1,g})\cdot\eta^2_{n-1,g} \end{aligned}$$

and $\phi\circ\Phi_K\circ\phi^{-1} = (\phi_1\circ\varphi_K\circ\phi_1^{-1})\oplus id\oplus id$. It is also clear that $\phi_1\circ\varphi_K\circ\phi_1^{-1}$ is a monodromy map of the fibered knot K.

Therefore $E(n)_K$ has a monodromy factorization of the form

$$\Phi_K(\eta_{n-1,g})\cdot\Phi_K(\eta_{n-1,g})\cdot\eta_{n-1,g}\cdot\eta_{n-1,g}$$

where $\eta_{n-1,g}$ is as in Proposition 2.10 and Φ_K comes from a monodromy map φ_K of the given fibered knot K. □

Corollary 2.12. *Let K_1, K_2 be two fibered knots such that $g(K_1)=g(K_2)$ and $\Phi_{K_2}=\Phi_{K_1}^{-1}$. Then $E(n)_{K_1}\approx E(n)_{K_2}$.*

Proof. $E(n)_{K_2}$ has a monodromy factorization

$$\begin{aligned} &\Phi_{K_2}(\eta_{n-1,g})\cdot\Phi_{K_2}(\eta_{n-1,g})\cdot\eta_{n-1,g}\cdot\eta_{n-1,g} \\ &= \Phi_{K_1}^{-1}(\eta_{n-1,g})\cdot\Phi_{K_1}^{-1}(\eta_{n-1,g})\cdot\eta_{n-1,g}\cdot\eta_{n-1,g} \\ &= \Phi_{K_1}^{-1}\{\eta_{n-1,g}\cdot\eta_{n-1,g}\cdot\Phi_{K_1}(\eta_{n-1,g}\cdot\eta_{n-1,g})\} \\ &\equiv \eta_{n-1,g}\cdot\eta_{n-1,g}\cdot\Phi_{K_1}(\eta_{n-1,g}\cdot\eta_{n-1,g}) \end{aligned}$$

and by using a sequence of Hurwitz moves and $\lambda^2_{\eta_{n-1,g}} = id$ we get

$$\Phi_{K_1}(\eta_{n-1,g})\cdot\Phi_{K_1}(\eta_{n-1,g})\cdot\eta_{n-1,g}\cdot\eta_{n-1,g}$$

which is a monodromy factorization of $E(n)_{K_1}$. Therefore $E(n)_{K_1}\approx E(n)_{K_2}$. □

Remark 2.13. Some of S. Akbulut's examples [Akb02] are easily obtained from this corollary. For example, if $K=3_1$, then K is not equivalent to K^* and $\Phi_{K^*}=\Phi_K^{-1}$.

3. Examples and applications

A construction of a fibered link was studied by J. Harer [Har82], J. Montesinos-Amilibia and H. Morton [MAM91] and it is well known how to find a geometric monodromy of a fibered knot or link.

The mapping class groups $\mathcal{M}_g$ and $\mathcal{M}_g^1$ are extensively studied and their properties are somewhat well known. Among these properties, S. Humphries [Hum79] showed that $\mathcal{M}_g$ and $\mathcal{M}_g^1$ are generated by $2g+1$ Dehn twists when $g\geq 2$ and B. Wajnryb [Waj96] proved that they can be generated by two elements.

Lemma 3.1. *Suppose that $g\geq 2$ and let a_i, b_i, c_i be simple closed curves on Σ_g^1 as in Figure 3. Let $S_g := t_{a_g}\circ t_{c_g}\circ\cdots\circ t_{a_2}\circ t_{c_2}\circ t_{a_1}\circ t_{c_1}$. We can choose the following*

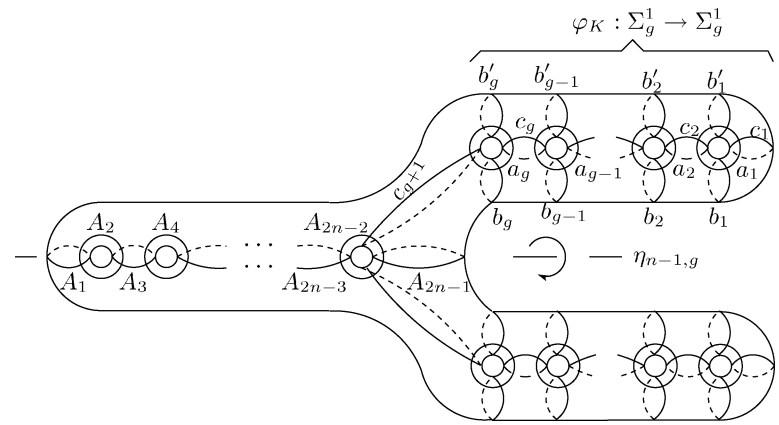

FIGURE 3. Generators

system of generators for $\mathcal{M}_g$ or $\mathcal{M}_g^1$:

(1) $t_{c_1}, t_{a_1}, t_{c_2}, t_{a_2}, \cdots, t_{c_g}, t_{a_g}$ *and* t_{b_2} [Hum79],
(2) $R := t_{b_g}^{-1} \circ t_{b_{g-1}}$ *and* S_g [Waj96],
(3) $B := t_{b_2}$ *and* S_g [Kor05].

Definition 3.2. For a given sequence of right-handed Dehn twists $W = w_n \cdot ... \cdot w_2 \cdot w_1$, the element $w_n \circ \cdots \circ w_2 \circ w_1$ in the mapping class group is denoted by λ_W and the group $\langle w_1, w_2, \cdots, w_n \rangle$ which is generated by the Dehn twists in W is denoted by $G(W)$.

Lemma 3.3. *If W and W' are Hurwitz equivalent,* i.e. *$W \sim W'$, then $G(W) = G(W')$.*

Proof. Let $W = w_n \cdot w_{n-1} \cdot ... \cdot w_2 \cdot w_1$ and let W' be obtained from W by performing one Hurwitz move. Then W' is of the form

$$w_n \cdot ... \cdot w_{i+2} \cdot w_{i+1}(w_i) \cdot w_{i+1} \cdot w_{i-1} \cdot ... \cdot w_1.$$

Therefore

$$G(W') = \langle w_1, \cdots, w_{i-1}, w_{i+1}(w_i), w_{i+1}, \cdots, w_n \rangle$$

and $w_{i+1}(w_i) = w_{i+1} \circ w_i \circ w_{i+1}^{-1} \in G(W)$ because $w_i, w_{i+1}^{\pm 1} \in G(W)$. So $G(W') \subseteqq G(W)$. Similarly, $w_i = w_{i+1}^{-1} \circ w_{i+1}(w_i) \circ w_{i+1} \in G(W')$ and this implies $G(W) \subseteqq G(W')$. So we have $G(W) = G(W')$ when W' is obtained by a Hurwitz move. Observe that W is obtainable from W' by one inverse Hurwitz move.

Therefore $G(W) = G(W')$ for any word W' in the same Hurwitz equivalence class of W. □

Lemma 3.4. *Let $W_i = w_{i,n_i} \cdot ... \cdot w_{i,2} \cdot w_{i,1}$ be a sequence of right-handed Dehn twists along a simple closed curve on Σ_g such that $\lambda_{W_i} = id$ for $i = 1, 2$. Suppose $f \in G(W_2)$. Then*

$$f(W_1) \cdot W_2 \sim W_1 \cdot W_2.$$

Proof. Since $f \in G(W_2)$, we can write $f = w_k^{\varepsilon_k} \circ \cdots \circ w_2^{\varepsilon_2} \circ w_1^{\varepsilon_1}$ where each w_i is a letter in W_2 which corresponds to a Dehn twist and ε_i is $+1$ or -1. Let $f_i = w_i^{\varepsilon_i} \circ \cdots \circ w_2^{\varepsilon_2} \circ w_1^{\varepsilon_1}$ for $i = 1, 2, \cdots, k$ and $f_0 = id$. Then $f_i = w_i^{\varepsilon_i} \circ f_{i-1}$ and $W_2 = W_{2,1} \cdot w_i \cdot W_{2,2}$ by decomposing W_2 as a product of two subsequences $W_{2,1}$, $W_{2,2}$ and a letter w_i.

We will prove $f_i(W_1) \cdot W_2 \sim f_{i-1}(W_1) \cdot W_2$ as follows:
If $\varepsilon_i = +1$, then

$$
\begin{aligned}
f_i(W_1) \cdot W_2 &= (w_i \circ f_{i-1})(W_1) \cdot W_{2,1} \cdot w_i \cdot W_{2,2} && (3.1)\\
&\sim (w_i \circ f_{i-1})(W_1) \cdot w_i \cdot w_i^{-1}(W_{2,1}) \cdot W_{2,2} && (3.2)\\
&\sim w_i \cdot f_{i-1}(W_1) \cdot w_i^{-1}(W_{2,1}) \cdot W_{2,2} && (3.3)\\
&\sim f_{i-1}(W_1) \cdot \lambda^{-1}_{f_{i-1}(W_1)}(w_i) \cdot w_i^{-1}(W_{2,1}) \cdot W_{2,2} && (3.4)\\
&= f_{i-1}(W_1) \cdot w_i \cdot w_i^{-1}(W_{2,1}) \cdot W_{2,2} && (3.5)\\
&\sim f_{i-1}(W_1) \cdot W_{2,1} \cdot w_i \cdot W_{2,2} = f_{i-1}(W_1) \cdot W_2. && (3.6)
\end{aligned}
$$

We will explain these explicitly. We get (3.2) from (3.1) by using a sequence of inverse Hurwitz moves (Definition 2.2). For example, if $W_{2,1} = v_n \cdot v_{n-1} \cdot \ldots \cdot v_2 \cdot v_1$ where each v_i is a right-handed or left-handed Dehn twist, then

$$
\begin{aligned}
W_{2,1} \cdot w_i &= v_n \cdot v_{n-1} \cdot \ldots \cdot v_2 \cdot v_1 \cdot w_i\\
&\sim v_n \cdot v_{n-1} \cdot \ldots \cdot v_2 \cdot w_i \cdot w_i^{-1}(v_1)\\
&\sim v_n \cdot v_{n-1} \cdot \ldots \cdot w_i \cdot w_i^{-1}(v_2) \cdot w_i^{-1}(v_1)\\
&\sim \cdots\\
&\sim v_n \cdot w_i \cdot w_i^{-1}(v_{n-1}) \cdot \ldots \cdot w_i^{-1}(v_2) \cdot w_i^{-1}(v_1)\\
&\sim w_i \cdot w_i^{-1}(v_n) \cdot w_i^{-1}(v_{n-1}) \cdot \ldots \cdot w_i^{-1}(v_2) \cdot w_i^{-1}(v_1)\\
&= w_i \cdot w_i^{-1}(v_n \cdot v_{n-1} \cdot \ldots \cdot v_2 \cdot v_1)\\
&= w_i \cdot w_i^{-1}(W_{2,1})
\end{aligned}
$$

by using the notational convention

$$w_i^{-1}(v_n) \cdot w_i^{-1}(v_{n-1}) \cdot \ldots \cdot w_i^{-1}(v_2) \cdot w_i^{-1}(v_1) = w_i^{-1}(v_n \cdot v_{n-1} \cdot \ldots \cdot v_2 \cdot v_1)$$

as in Definition 2.2. From (3.2) to (3.3), we use a sequence of inverse Hurwitz moves as above to the word $(w_i \circ f_{i-1})(W_1) \cdot w_i$ so that we get $w_i \cdot w_i^{-1}((w_i \circ f_{i-1})(W_1))$ which is $w_i \cdot f_{i-1}(W_1)$. From (3.3) to (3.4), we apply a sequence of inverse Hurwitz moves to $w_i \cdot f_{i-1}(W_1)$ as follows:

$$
\begin{aligned}
w_i \cdot f_{i-1}(W_1) &= w_i \cdot f_{i-1}(w_{1,n_1} \cdot w_{1,n_1-1} \ldots \cdot w_{1,1})\\
&= w_i \cdot f_{i-1}(w_{1,n_1}) \cdot f_{i-1}(w_{1,n_1-1}) \cdot \ldots \cdot f_{i-1}(w_{1,1})\\
&\sim f_{i-1}(w_{1,n_1}) \cdot (f_{i-1}(w_{1,n_1}))^{-1}(w_i) \cdot f_{i-1}(w_{1,n_1-1}) \cdot \ldots \cdot f_{i-1}(w_{1,1})\\
&\sim f_{i-1}(w_{1,n_1}) \cdot f_{i-1}(w_{1,n_1-1}) \cdot (f_{i-1}(w_{1,n_1} \circ w_{1,n_1-1}))^{-1}(w_i) \cdot\\
&\qquad f_{i-1}(w_{1,n_1-2}) \cdot \ldots \cdot f_{i-1}(w_{1,1})\\
&\sim \cdots\\
&\sim f_{i-1}(w_{1,n_1}) \cdot f_{i-1}(w_{1,n_1-1}) \cdot \ldots \cdot f_{i-1}(w_{1,1}) \cdot\\
&\qquad (f_{i-1}(w_{1,n_1} \circ \cdots \circ w_{1,2} \circ w_{1,1}))^{-1}(w_i)\\
&= f_{i-1}(W_1) \cdot \lambda^{-1}_{f_{i-1}(W_1)}(w_i).
\end{aligned}
$$

For (3.5), we use $\lambda^{-1}_{f_{i-1}(W_1)}(w_i) = w_i$ because

$$\lambda^{-1}_{f_{i-1}(W_1)} = f_{i-1} \circ \lambda^{-1}_{W_1} \circ f^{-1}_{i-1} = f_{i-1} \circ id \circ f^{-1}_{i-1} = id.$$

We obtain (3.6) from (3.5) by using the reversed process of (3.1) to (3.2).

The proof of the $\varepsilon_i = -1$ case is very similar to the $\varepsilon_i = 1$ case. If $\varepsilon_i = -1$, then

$$\begin{aligned}
f_i(W_1) \cdot W_2 &\sim \lambda_{f_i(W_1)}(W_2) \cdot f_i(W_1) = W_2 \cdot f_i(W_1) && (3.7)\\
&= W_{2,1} \cdot w_i \cdot W_{2,2} \cdot (w_i^{-1} \circ f_{i-1})(W_1) && (3.8)\\
&\sim W_{2,1} \cdot w_i(W_{2,2}) \cdot w_i \cdot (w_i^{-1} \circ f_{i-1})(W_1) && (3.9)\\
&\sim W_{2,1} \cdot w_i(W_{2,2}) \cdot f_{i-1}(W_1) \cdot w_i && (3.10)\\
&\sim W_{2,1} \cdot w_i(W_{2,2}) \cdot \lambda_{f_{i-1}(W_1)}(w_i) \cdot f_{i-1}(W_1) && (3.11)\\
&= W_{2,1} \cdot w_i(W_{2,2}) \cdot w_i \cdot f_{i-1}(W_1) && (3.12)\\
&\sim W_{2,1} \cdot w_i \cdot W_{2,2} \cdot f_{i-1}(W_1) = W_2 \cdot f_{i-1}(W_1) && (3.13)\\
&\sim \lambda_{W_2}(f_{i-1}(W_1)) \cdot W_2 = f_{i-1}(W_1) \cdot W_2. && (3.14)
\end{aligned}$$

We have $f_i(W_1) \cdot w \sim \lambda_{f_i(W_1)}(w) \cdot f_i(W_1)$ for each letter w by using a sequence of Hurwitz moves. So we apply this for each letter in W_2 one by one from the leftmost letter in W_2. Then we have $\lambda_{f_i(W_1)}(W_2) \cdot f_i(W_1)$. Since $\lambda_{W_1} = id$, we have $\lambda_{f_i(W_1)} = id$ and this implies (3.7). (3.8) is just a rewriting of (3.7) by using $W_2 = W_{2,1} \cdot w_i \cdot W_{2,2}$ and $f_i = w_i^{-1} \cdot f_{i-1}$. (3.9) is obtained from (3.8) by using $w_i \cdot W_{2,2} \sim w_i(W_{2,2}) \cdot w_i$, which is a result of a sequence of Hurwitz moves. (3.10) is a result of the Hurwitz moves

$$w_i \cdot (w_i^{-1} \circ f_{i-1})(W_1) \sim w_i((w_i^{-1} \circ f_{i-1})(W_1)) \cdot w_i = f_{i-1}(W_1) \cdot w_i$$

from (3.9). (3.12) is a result of $\lambda_{W_1} = id$ and the Hurwitz moves

$$f_{i-1}(W_1) \cdot w_i \sim \lambda_{f_{i-1}(W_1)}(w_i) \cdot f_{i-1}(W_1)) = w_i \cdot f_{i-1}(W_1)$$

from (3.10). (3.12) to (3.13) is the reversed process of (3.8) to (3.9), and (3.13) to (3.14) is the reversed process of (3.7).

Therefore we have $f_i(W_1) \cdot W_2 \sim f_{i-1}(W_1) \cdot W_2$ for each $i = 1, 2, \cdots, k$ and an induction process gives the conclusion. □

Remark 3.5. In [Aur05], D. Auroux also gets a similar result.

Definition 3.6 ([BZ03])**.** The 2-*bridge knot* $b(\alpha, \beta)$ is the knot

$$C(n_1, -n_2, n_3, -n_4, \cdots, (-1)^{k-1} n_k)$$

as in Figure 4 where

$$\frac{\beta}{\alpha} = \cfrac{1}{n_1 + \cfrac{1}{n_2 + \cfrac{1}{\ddots \cfrac{1}{n_{k-1} + \cfrac{1}{n_k}}}}} = [n_1, n_2, \cdots, n_k].$$

The 2-bridge knot $b(\alpha, \beta)$ is characterized by its two-fold branched covering space $L(\alpha, \beta)$, the lens space of type (α, β). So we may assume that $\alpha > 0$, α and β are relatively prime and $0 \leq \beta < \alpha$.

Definition 3.7 ([FS04])**.** Let K_1, K_2 be two fibered knots in S^3 and $n \geq 1$. Then

$$Y(n; K_1, K_2) = E(n)_{K_1} \sharp_{id: \Sigma_{2g+n-1} \to \Sigma_{2g+n-1}} E(n)_{K_2}.$$

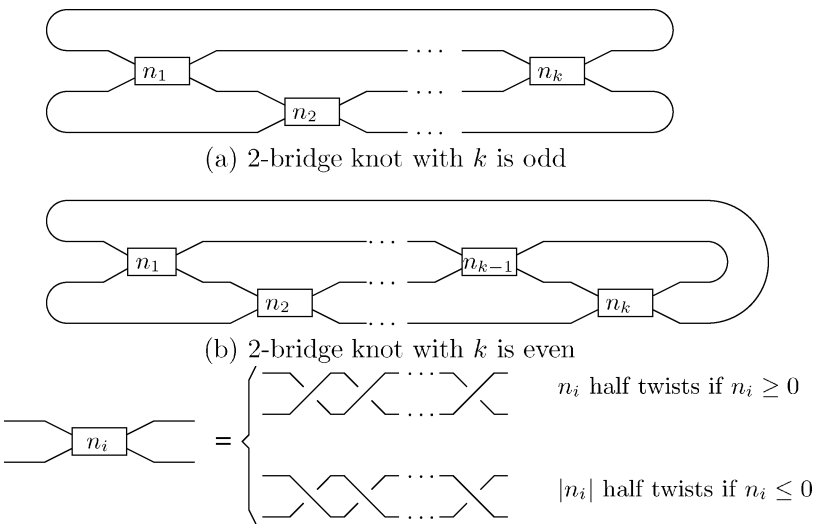

FIGURE 4. Two bridge knot $C(n_1, n_2, \cdots, n_k)$

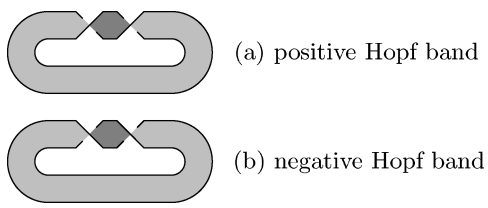

FIGURE 5. Hopf band

Lemma 3.8. *Let K be a fibered knot of genus $g \geq 1$ such that*

$$\Phi_K \in \langle t_{a_1}, t_{c_1}, t_{a_2}, t_{c_2}, \cdots, t_{a_g}, t_{c_g} \rangle$$

and let K_0 be the 2-bridge knot $C(\underbrace{-2, -2, \cdots, -2, -2}_{2g})$. Then

$$E(n)_K \sharp_{id} E(n)_{K_0} \approx D(n, g) \sharp_{id} E(n)_{K_0}$$

for each fixed $n \geq 1$.

Proof. $E(n)_K \sharp_{id} E(n)_{K_0}$ has a monodromy factorization of the form

$$\Phi_{K_0}(\eta_{n-1,g}^2) \cdot \eta_{n-1,g}^2 \cdot \Phi_K(\eta_{n-1,g}^2) \cdot \eta_{n-1,g}^2.$$

Now by applying a sequence of Hurwitz moves to move each letter in $\Phi_{K_0}(\eta_{n-1,g}^2) \cdot \eta_{n-1,g}^2$ to the right crossed over $\Phi_K(\eta_{n-1,g}^2)$, we get

$$\Phi_K(\eta_{n-1,g}^2) \cdot \Phi_{K_0}(\eta_{n-1,g}^2) \cdot \eta_{n-1,g}^2 \cdot \eta_{n-1,g}^2$$

because $\lambda_{\eta_{n-1,g}^2} = id$ and $\lambda_{\Phi_{K_0}(\eta_{n-1,g}^2)} = id$, which comes from the fact that $\lambda_{\eta_{n-1,g}}$ is an involution in $\mathcal{M}_{2g+n-1}$.

Since $\Phi_K \in \langle t_{a_1}, t_{c_1}, t_{a_2}, t_{c_2}, \cdots, t_{a_g}, t_{c_g}\rangle$, by Proposition 3.4 it is enough to show that $t_{a_i}, t_{c_i} \in G(\Phi_{K_0}(\eta^2_{n-1,g}) \cdot \eta^4_{n-1,g})$ for each $i = 1, 2, \cdots, g$. By Proposition 3.3, we can do this by checking

$$\Phi_{K_0}(\eta^2_{n-1,g}) \cdot \eta^2_{n-1,g} \cdot \eta^2_{n-1,g} \sim \ldots \cdot t_{a_i} \cdot \ldots, \tag{3.15}$$

$$\Phi_{K_0}(\eta^2_{n-1,g}) \cdot \eta^2_{n-1,g} \cdot \eta^2_{n-1,g} \sim \ldots \cdot t_{c_i} \cdot \ldots \tag{3.16}$$

for $i = 1, 2, \cdots, g$ where a word is expressed as $\ldots \cdot t_{a_i} \cdot \ldots$ when the word contains the letter t_{a_i} in some place.

Since K_0 can be constructed from an unknot by plumbing $2g$ negative Hopf bands (Figure 5), we may consider $\Phi_{K_0} = t^{-1}_{a_g} \circ t^{-1}_{c_g} \circ \cdots \circ t^{-1}_{a_1} \circ t^{-1}_{c_1}$. For this Φ_{K_0}, it is not hard to check that

$$t_{a_i} = (t^{-1}_{B_{2i}} \circ \Phi_{K_0})(t_{B_{2i}}), \tag{3.17}$$

$$t_{c_i} = (t^{-1}_{B_{2i-1}} \circ \Phi_{K_0})(t_{B_{2i-1}}) \tag{3.18}$$

for $i = 1, 2, \cdots, g$.

Since the word $\eta^2_{n-1,g}$ contains the letter $t_{B_{2i}}$ and $\Phi_{K_0}(\eta^2_{n-1,g})$ contains the letter $\Phi_{K_0}(t_{B_{2i}})$ in some place, we can write

$$\Phi_{K_0}(\eta^2_{n-1,g}) \cdot \eta^2_{n-1,g} \cdot \eta^2_{n-1,g} = \ldots \cdot \Phi_{K_0}(t_{B_{2i}}) \cdot \ldots \cdot t_{B_{2i}} \cdot \ldots$$

and by performing Hurwitz moves we can move the letter $\Phi_{K_0}(t_{B_{2i}})$ to the left position of the letter $t_{B_{2i}}$ so that we obtain a word of the form

$$\ldots \cdot \Phi_{K_0}(t_{B_{2i}}) \cdot t_{B_{2i}} \cdot \ldots$$

and by doing one inverse Hurwitz move we get

$$\ldots \cdot t_{B_{2i}} \cdot t^{-1}_{B_{2i}}(\Phi_{K_0}(t_{B_{2i}})) \cdot \ldots = \ldots \cdot t_{B_{2i}} \cdot (t^{-1}_{B_{2i}} \circ \Phi_{K_0})(t_{B_{2i}}) \cdot \ldots$$

and by using (3.17) we get a word of the form

$$\ldots \cdot t_{a_i} \cdot \ldots$$

in the Hurwitz equivalence class of $\Phi_{K_0}(\eta^2_{n-1,g}) \cdot \eta^2_{n-1,g} \cdot \eta^2_{n-1,g}$.

Similarly from (3.18) we get

$$\begin{aligned}
&\Phi_{K_0}(\eta^2_{n-1,g}) \cdot \eta^2_{n-1,g} \cdot \eta^2_{n-1,g} \\
&= \ldots \cdot \Phi_{K_0}(t_{B_{2i-1}}) \cdot \ldots \cdot t_{B_{2i-1}} \cdot \ldots \\
&\sim \ldots \cdot \Phi_{K_0}(t_{B_{2i-1}}) \cdot t_{B_{2i-1}} \cdot \ldots \\
&\sim \ldots \cdot t_{B_{2i-1}} \cdot (t^{-1}_{B_{2i-1}} \circ \Phi_{K_0})(t_{B_{2i-1}}) \cdot \ldots \\
&= \ldots \cdot t_{c_i} \cdot \ldots.
\end{aligned}$$

So (3.15) and (3.16) are proved. Therefore by using Proposition 3.4 we get

$$\begin{aligned}
&\Phi_K(\eta^2_{n-1,g}) \cdot \Phi_{K_0}(\eta^2_{n-1,g}) \cdot \eta^2_{n-1,g} \cdot \eta^2_{n-1,g} \\
&\sim \eta^2_{n-1,g} \cdot \Phi_{K_0}(\eta^2_{n-1,g}) \cdot \eta^2_{n-1,g} \cdot \eta^2_{n-1,g} \\
&\sim \Phi_{K_0}(\eta^2_{n-1,g}) \cdot \eta^2_{n-1,g} \cdot \eta^2_{n-1,g} \cdot \eta^2_{n-1,g},
\end{aligned}$$

which is a monodromy factorization of $D(n,g)\sharp_{id}E(n)_{K_0}$. □

Remark 3.9. $C(\underbrace{-2, -2, \cdots, -2, -2}_{2g})$ is $b(2g+1, -2g) = b(2g+1, 1)$, which is the torus knot $T(2g+1, 2)$.

Theorem 3.10. *Let K_i, K_j be two 2-bridge knots of the form*

$$C(2\varepsilon_{i,1}, 2\varepsilon_{i,2}, \cdots, 2\varepsilon_{i,2g-1}, 2\varepsilon_{i,2g})$$

where $g \geq 1$ and $\varepsilon_{i,k} = +1$ or $\varepsilon_{i,k} = -1$ for each $k = 1, 2, \cdots, 2g$. Let K_0 be the 2-bridge knot of the form $C(\underbrace{-2, -2, \cdots, -2, -2}_{2g})$. Then for each $n \geq 1$, $Y(n; K_i, K_0) \approx Y(n; K_j, K_0)$.

Proof. Since we can select φ_{K_i} so that

$$\Phi_{K_i} = t_{a_g}^{\varepsilon_{i,2g}} \circ t_{c_g}^{\varepsilon_{i,2g-1}} \circ \cdots \circ t_{a_1}^{\varepsilon_{i,2}} \circ t_{c_1}^{\varepsilon_{i,1}},$$

it is clear from Proposition 3.8. □

Remark 3.11. In [FS99], R. Fintushel and R. Stern could construct (non-simply-connected) nondiffeomorphic 4-manifolds which have the same Seiberg-Witten invariants. Underlying this construction are the 2-bridge knots

$$K_1 = b(105, 64) = C(2, 2, -2, -2, -2, -2, 2, 2)$$

and

$$K_2 = b(105, 76) = C(2, 2, 2, -2, -2, 2, 2, 2).$$

Even though we do not know whether $E(n)_{K_1}$ is diffeomorphic to $E(n)_{K_2}$, we know that they become diffeomorphic after doing a fiber sum with $E(n)_{K_0}$. On the other hand, for any fibered knot K_1, K_2 of genus g, R. Fintushel and R. Stern [FS04] showed that $SW_{Y(n;K_1,K_2)} = t_K + (-1)^n t_K^{-1}$. Therefore we cannot distinguish $Y(n; K_1, K_2)$ by using Seiberg-Witten invariants. It is an interesting question whether the diffeomorphism type of $Y(n; K_1, K_2)$ determines the knot type of K_1 and K_2 or not. Theorem 3.10 combined with the above $K_1 = b(105, 64)$ and $K_2 = b(105, 76)$ gives an example such that $Y(n; K_1, K_0) \approx Y(n; K_2, K_0)$ although K_1 is not equivalent to K_2 as a knot. For each $g \geq 1$ there are inequivalent genus g fibered knots K, K' such that $Y(n; K, K_0) \approx Y(n : K', K_0)$. Moreover if $g \geq 2$, then we can construct infinitely many inequivalent genus g fibered knots $\{K_i\}$ which share the same Alexander polynomial and $Y(n; K_i, K_0)$ are all diffeomorphic. Such examples are obtained by using Stallings' twist.

Theorem 3.12. *Let K_1, K_2 be any two genus $g \geq 2$ fibered knots in S^3 and let K_0 be the 2-bridge knot $C(\underbrace{-2, -2, \cdots, -2, -2}_{2g})$. Then*

$$E(n)_{K_1} \sharp_{t_{b_2}} E(n)_{K_0} \approx E(n)_{K_2} \sharp_{t_{b_2}} E(n)_{K_0}$$

for each fixed integer $n \geq 1$.

Proof. $E(n)_K \sharp_{t_{b_2}} E(n)_{K_0}$ has a monodromy factorization of the form

$$t_{b_2}(\Phi_{K_0}(\eta_{n-1,g}^2) \cdot \eta_{n-1,g}^2) \cdot \Phi_K(\eta_{n-1,g}^2) \cdot \eta_{n-1,g}^2,$$

and by using inverse Hurwitz moves we have

$$\begin{aligned} &t_{b_2}(\Phi_{K_0}(\eta_{n-1,g}^2) \cdot \eta_{n-1,g}^2) \cdot \eta_{n-1,g}^2 \cdot \lambda_{\eta_{n-1,g}^2}^{-1}(\Phi_K(\eta_{n-1,g}^2)) \\ &= t_{b_2}(\Phi_{K_0}(\eta_{n-1,g}^2) \cdot \eta_{n-1,g}^2) \cdot \eta_{n-1,g}^2 \cdot \Phi_K(\eta_{n-1,g}^2) \end{aligned}$$

because $\lambda_{\eta_{n-1,g}^2} = id$.

We claim that

$$\langle t_{a_i}, t_{c_i}, t_{b_2} \mid i = 1, 2, \cdots, g \rangle \subseteqq G(t_{b_2}(\Phi_{K_0}(\eta_{n-1,g}^2) \cdot \eta_{n-1,g}^2) \cdot \eta_{n-1,g}^2). \tag{3.19}$$

From this claim, we get the conclusion as follows: for any given genus $g \geq 2$ fibered knot $K \subset S^3$, we can select $\Phi_K \in \langle t_{c_1}, t_{a_1}, \cdots, t_{c_g}, t_{a_g}, t_{b_2} \rangle$ (Proposition 3.1 and Theorem 2.11). Therefore

$$
\begin{aligned}
&t_{b_2}(\Phi_{K_0}(\eta_{n-1,g}^2) \cdot \eta_{n-1,g}^2) \cdot \Phi_K(\eta_{n-1,g}^2) \cdot \eta_{n-1,g}^2 && (3.20)\\
&\sim \Phi_K(\eta_{n-1,g}^2) \cdot t_{b_2}(\Phi_{K_0}(\eta_{n-1,g}^2) \cdot \eta_{n-1,g}^2) \cdot \eta_{n-1,g}^2 && (3.21)\\
&\sim \eta_{n-1,g}^2 \cdot t_{b_2}(\Phi_{K_0}(\eta_{n-1,g}^2) \cdot \eta_{n-1,g}^2) \cdot \eta_{n-1,g}^2 && (3.22)\\
&\sim t_{b_2}(\Phi_{K_0}(\eta_{n-1,g}^2) \cdot \eta_{n-1,g}^2) \cdot \eta_{n-1,g}^2 \cdot \eta_{n-1,g}^2, && (3.23)
\end{aligned}
$$

because (3.21) is obtained from (3.20) by a sequence of Hurwitz moves and the fact that $\lambda_{t_{b_2}(\Phi_{K_0}(\eta_{n-1,g}^2)\cdot\eta_{n-1,g}^2)} = id$, (3.22) is obtained from (3.21) by Proposition 3.4 and $\Phi_K \in G(t_{b_2}(\Phi_{K_0}(\eta_{n-1,g}^2) \cdot \eta_{n-1,g}^2) \cdot \eta_{n-1,g}^2)$, and (3.23) is obtained from (3.22) by a sequence of Hurwitz moves. Since (3.23) is a monodromy factorization of $D(n,g)\sharp_{t_{b_2}} E(n)_{K_0}$, we get the conclusion.

Therefore we only need to check the above claim (3.19), and it is enough to show

$$t_{a_i},\ t_{c_i},\ t_{b_2} \in G(t_{b_2}(\Phi_{K_0}(\eta_{n-1,g}^2) \cdot \eta_{n-1,g}^2) \cdot \eta_{n-1,g}^2)$$

for all $i = 1, 2, \cdots, g$.

In Proposition 3.8 we already showed that $t_{a_i},\ t_{c_i} \in G(\Phi_{K_0}(\eta_{n-1,g}^2) \cdot \eta_{n-1,g}^2)$ for $i = 1, 2, \cdots, g$. Since $t_{b_2}(t_{a_i}) = t_{a_i}$ for $i = 1, 3, 4, \cdots, g$ and $t_{b_2}(t_{c_i}) = t_{c_i}$ for all $i = 1, 2, \cdots, g$, we have

$$t_{a_i}, t_{c_i} \in G(t_{b_2}(\Phi_{K_0}(\eta_{n-1,g}^2) \cdot \eta_{n-1,g}^2)) \subseteqq G(t_{b_2}(\Phi_{K_0}(\eta_{n-1,g}^2) \cdot \eta_{n-1,g}^2) \cdot \eta_{n-1,g}^2)$$

for all $i = 1, 2, \cdots, g$ except t_{a_2}. Therefore the remaining part is to show

$$t_{a_2},\ t_{b_2} \in G(t_{b_2}(\Phi_{K_0}(\eta_{n-1,g}^2) \cdot \eta_{n-1,g}^2) \cdot \eta_{n-1,g}^2),$$

and it can be proved as follows:

$$
\begin{aligned}
& t_{b_2}(\Phi_{K_0}(\eta_{n-1,g}^2) \cdot \eta_{n-1,g}^2) \cdot \eta_{n-1,g}^2 \\
(3.24)\ &= t_{b_2}(\Phi_{K_0}(\eta_{n-1,g}^2)) \cdot t_{b_2}(\eta_{n-1,g}^2) \cdot \eta_{n-1,g}^2 \\
(3.25)\ &\sim t_{b_2}(\Phi_{K_0}(\eta_{n-1,g}^2)) \cdot t_{b_2}(\eta_{n-1,g}) \cdot \eta_{n-1,g}^2 \cdot t_{b_2}(\eta_{n-1,g}) \\
(3.26)\ &= \ldots \cdot t_{b_2}(\Phi_{K_0}(t_{B_4})) \cdot \ldots \cdot t_{b_2}(t_{B_4}) \cdot \ldots \cdot t_{B_3} \cdot \ldots \cdot t_{b_2}(t_{B_3}) \cdot \ldots \\
(3.27)\ &\sim \ldots \cdot t_{b_2}(\Phi_{K_0}(t_{B_4})) \cdot t_{b_2}(t_{B_4}) \cdot \ldots \cdot t_{B_3} \cdot t_{b_2}(t_{B_3}) \cdot \ldots \\
(3.28)\ &\sim \ldots \cdot t_{b_2}(t_{B_4}) \cdot (t_{b_2}(t_{B_4}))^{-1}(t_{b_2}(\Phi_{K_0}(t_{B_4}))) \cdot \ldots \cdot t_{B_3}(t_{b_2}(t_{B_3})) \cdot t_{B_3} \cdot \ldots \\
(3.29)\ &= \ldots \cdot t_{b_2}((t_{B_4}^{-1} \circ \Phi_{K_0})(t_{B_4})) \cdot \ldots \cdot t_{B_3}(t_{b_2}(t_{B_3})) \cdot \ldots \\
(3.30)\ &= \ldots \cdot t_{b_2}(t_{a_2}) \cdot \ldots \cdot t_{b_2} \cdot \ldots \\
(3.31)\ &\sim \ldots \cdot t_{b_2}(t_{a_2}) \cdot t_{b_2} \cdot \ldots \\
(3.32)\ &\sim \ldots \cdot t_{b_2} \cdot t_{a_2} \cdot \ldots
\end{aligned}
$$

where

- (3.25) is from (3.24) by a sequence of inverse Hurwitz moves,
- in (3.26), we just write the letters of (3.25) which we need in our proof,
- (3.27) is from (3.26) by a sequence of Hurwitz moves,
- (3.28) is from (3.27) by one Hurwitz move and one inverse Hurwitz move,
- in (3.29), we just write the letters of (3.28) which we need in our proof and we use $(t_{b_2}(t_{B_4}))^{-1}(t_{b_2}(\Phi_{K_0}(t_{B_4}))) = ((t_{b_2}(t_{B_4}))^{-1} \circ t_{b_2})(\Phi_{K_0}(t_{B_4})) = (t_{b_2} \circ t_{B_4}^{-1} \circ t_{b_2}^{-1} \circ t_{b_2})(\Phi_{K_0}(t_{B_4})) = t_{b_2}((t_{B_4}^{-1} \circ \Phi_{K_0})(t_{B_4}))$,

- (3.30) is from (3.29) because $(t_{B_4}^{-1} \circ \Phi_{K_0})(t_{B_4}) = t_{a_2}$ by equation (3.17) and $t_{B_3}(t_{b_2}(t_{B_3})) = t_{b_2}$ by the braid relation,
- (3.31) is from (3.30) by using a sequence of Hurwitz moves,
- (3.32) is from (3.31) by an inverse Hurwitz move.

□

Remark 3.13. Let X_1, X_2 and X be genus g Lefschetz fibrations over $\mathbb{CP}^1$ such that X_1 and X_2 are isomorphic as Lefschetz fibrations and let Φ be an element of $\mathcal{M}_g$. Then we can select a monodromy factorization W_i of X_i, $i = 1, 2$, such that $W_1 \sim W_2$. Therefore $\Phi(W) \cdot W_1 \sim \Phi(W) \cdot W_2$ for any genus g monodromy factorization W of X and this implies $X_1 \sharp_\Phi X \approx X_2 \sharp_\Phi X$. But in general $X_1 \sharp_\Phi X \approx X_2 \sharp_\Phi X$ does not imply $X_1 \approx X_2$.

It is also an intersting question whether a given symplectic 4-manifold has non-isomorphic monodromy factorization with the diffeomorphic generic fiber or not. We will discuss this problem in [PY07].

Acknowledgment

The author would like to thank Ronald Stern and Jongil Park for their comments and suggestions to improve this article. He also appreciates the anonymous referee for giving several suggestions and corrections.

References

[Akb02] S. Akbulut, *Variations on Fintushel-Stern knot surgery on 4-manifolds*, Turkish J. Math. **26** (2002), no. 1, 81–92. MR2002m:57039

[Aur05] D. Auroux, *A stable classification of Lefschetz fibrations*, Geom. Topol. **9** (2005), 203–217 (electronic). MR2115673 (2005i:57032)

[BZ03] G. Burde and H. Zieschang, *Knots*, second ed., de Gruyter Studies in Mathematics, vol. 5, Walter de Gruyter & Co., Berlin, 2003. MR1959408 (2003m:57005)

[FS98a] R. Fintushel and R. Stern, *Constructions of smooth 4-manifolds*, Proceedings of the International Congress of Mathematicians, Vol. II (Berlin, 1998), Extra Vol. II, 1998, pp. 443–452 (electronic). MR99g:57033

[FS98b] ———, *Knots, links, and 4-manifolds*, Invent. Math. **134** (1998), no. 2, 363–400. MR99j:57033

[FS99] ———, *Nondiffeomorphic symplectic 4-manifolds with the same Seiberg-Witten invariants*, Proceedings of the Kirbyfest (Berkeley, CA, 1998), Geom. Topol., Coventry, 1999, pp. 103–111 (electronic). MR2000j:57065

[FS04] ———, *Families of simply connected 4-manifolds with the same Seiberg-Witten invariants*, Topology **43** (2004), no. 6, 1449–1467. MR2081432 (2005d:57044)

[Gur] Y. Gurtas, *Positive Dehn Twist Expressions for some New Involutions in Mapping Class Group*, arXiv:math.GT/0404310.

[Har82] J. Harer, *How to construct all fibered knots and links*, Topology **21** (1982), no. 3, 263–280. MR649758 (83e:57007)

[Hum79] S. Humphries, *Generators for the mapping class group*, Topology of low-dimensional manifolds (Proc. Second Sussex Conf., Chelwood Gate, 1977), Lecture Notes in Math., vol. 722, Springer, Berlin, 1979, pp. 44–47. MR547453 (80i:57010)

[Kas80] A. Kas, *On the handlebody decomposition associated to a Lefschetz fibration*, Pacific J. Math. **89** (1980), no. 1, 89–104. MR596919 (82f:57012)

[Kor05] M. Korkmaz, *Generating the surface mapping class group by two elements*, Trans. Amer. Math. Soc. **357** (2005), no. 8, 3299–3310 (electronic). MR2135748 (2006c:57003)

[MAM91] J. M. Montesinos-Amilibia and H. R. Morton, *Fibred links from closed braids*, Proc. London Math. Soc. (3) **62** (1991), no. 1, 167–201. MR1078219 (91m:57003)

[Mat96] Y. Matsumoto, *Lefschetz fibrations of genus two—a topological approach*, Topology and Teichmüller spaces (Katinkulta, 1995), World Sci. Publishing, River Edge, NJ, 1996, pp. 123–148. MR1659687 (2000h:14038)

[Mor83] H. R. Morton, *Fibred knots with a given Alexander polynomial*, Knots, braids and singularities (Plans-sur-Bex, 1982), Enseignement Math., Geneva, 1983, pp. 205–222. MR85j:57006

[PY07] J. Park and K.-H. Yun, *Nonisomorphic Lefschetz fibrations on $E(n)_K$*, 2007, preprint.

[Waj96] B. Wajnryb, *Mapping class group of a surface is generated by two elements*, Topology **35** (1996), no. 2, 377–383. MR1380505 (96m:57007)

[Yun06] K.-H. Yun, *On the signature of a Lefschetz fibration coming from an involution*, Topology Appl. **153** (2006), no. 12, 1994–2012. MR2237592

Department of Mathematics, Sungshin Women's University, 249-1 Dongseon-dong 3-ga, Seongbuk-gu, Seoul 136-742, Korea

E-mail address: kyun@sungshin.ac.kr